Raymarine®

AXIOM 2 XL

Installation Instructions

Document number: 87445 (Rev 7) | English (en-US) | Date: 02-2026

Legal notices

Trademark and patents notice

Raymarine®, **Tacktick®**, **Pathfinder®**, **Clear Pulse®**, **Truzoom®**, **SeaTalk®** , **SeaTalk HS™**, **SeaTalk NG™**, and **MicroNet™**, are registered or claimed trademarks of Raymarine UK Ltd.
FLIR®, **Fishidy®**, **Fishing Hot Spots®**, **YachtSense™** , **DockSense®**, **RangeFusion™**, **DownVision®** , **SideVision®**, **RealVision®**, **HyperVision™**, **Wi-Fish®**, **Dragonfly®**, **Element®**, **Quantum®**, **Cyclone™**, **Alpha™**, **Axiom®**, **Infrared Everywhere**, **The World's Sixth Sense** and **ClearCruise®** are registered or claimed trademarks of Teledyne FLIR LLC.
All other trademarks, trade names, or company names referenced herein are used for identification only and are the property of their respective owners.
This product is protected by patents, design patents, patents pending, or design patents pending.

Fair Use Statement

You may print no more than three copies of this manual for your own use. You may not make any further copies or distribute or use the manual in any other way including without limitation exploiting the manual commercially or giving or selling copies to third parties.

Content notice

Please ensure that you have obtained this document only from Raymarine, and that it is the **latest** available version.
There are numerous third-party Internet websites (such as *www.manualslib.com*) hosting Raymarine product manuals. These websites are not authorized by Raymarine to do so, and are often hosting illegitimate or older versions of Raymarine product manuals, which may contain inaccurate or misleading information.
To obtain the latest official documentation for a Raymarine product, please visit the official Raymarine website: www.docs.raymarine.com

Artificial Intelligence (AI) content notice

There are numerous third-party **Artificial Intelligence** (AI) services available to the public, which are capable of providing a summary or transcription of the information provided by official Raymarine publications or websites, either in written or audio/video formats. These services may alter, supplement, or convey the original information provided by Raymarine in inaccurate or misleading ways.
Please ensure that you have obtained this document only from Raymarine, and that it is the **latest** available version.

English (en-US)
Document number: 87445 (Rev 7)

CONTENTS

CHAPTER 1 IMPORTANT INFORMATION..... 9
Safety warnings..... 9
Product warnings..... 9
Regulatory notices.....10
Regulatory e-Label 10
Declaration of Conformity.....10
Network interfaces and services 10
PSTI Compliance.....11
RF exposure 11
Compliance Statement (Part 15.19) 11
FCC Interference Statement (Part 15.105 (b)) 11
Innovation, Science and Economic Development Canada (ISED) 12
Innovation, Sciences et Développement économique Canada (Français).....12
Disclaimer.....12
Electronic chart data 12
Warranty policy and registration.....12
Product disposal.....12
IMO and SOLAS.....13
Technical accuracy 13
Publication copyright.....13

CHAPTER 2 DOCUMENT INFORMATION..... 14
2.1 Applicable products 15
2.2 Document information.....15
2.3 Document conventions.....15
2.4 Document illustrations.....15
2.5 Product documentation 15
2.6 Operation instructions 16
Multifunction display / chartplotter software version.....16

CHAPTER 3 PRODUCT AND SYSTEM OVERVIEW..... 17
3.1 Product overview.....18
3.2 Additional components.....19
3.3 Typical systems 19

CHAPTER 4 PARTS SUPPLIED..... 22
4.1 Parts supplied 23
4.2 Additional parts supplied in MFD kit 23

CHAPTER 5 PRODUCT DIMENSIONS 24
5.1 Display dimensions.....25
5.2 Alarm buzzer dimensions 26
5.3 Card reader dimensions.....26

CHAPTER 6 LOCATION REQUIREMENTS 27
6.1 Warnings and cautions.....28
6.2 General location requirements.....28
Rear access requirements.....28
6.3 Compass safe distance.....28
6.4 Magnetic sun covers.....29
6.5 24” display above decks installation requirements 29
6.6 GNSS (GPS) location requirements 29
6.7 Touchscreen location requirements.....30
6.8 Wireless location requirements for optimum performance.....30

6.9 Viewing angle considerations 31
6.10 EMC installation guidelines.....31
RF interference.....32
6.11 Card reader location requirements 32
6.12 Alarm buzzer location requirements 32

CHAPTER 7 MOUNTING PREPARATION 34
7.1 Tools required.....35
7.2 Rear access requirements.....35
7.3 Mounting options 35
7.4 Preparing the mounting surface — surface mounting.....36
7.5 Preparing the mounting surface — flush mounting.....36
7.6 Fitting the gasket tape.....37

CHAPTER 8 MOUNTING..... 38
8.1 Mounting the display.....39
8.2 Protective film.....40
8.3 Mounting the card reader 40
8.4 Mounting the alarm buzzer 41

CHAPTER 9 CABLES AND CONNECTIONS — GENERAL INFORMATION..... 42
9.1 General cabling guidance.....43
Cable types and length 43
Cable routing and bend radius.....43
Strain relief.....43
Circuit isolation.....43
Cable shielding.....44
9.2 Connections overview.....44
9.3 Connecting cables 45
9.4 Bare-ended wire connections 45

CHAPTER 10 POWER CONNECTIONS..... 46
10.1 Power connection 47
Inline fuse and thermal breaker ratings.....47
10.2 Power distribution 48
10.3 Grounding — optional grounding point.....50

CHAPTER 11 NETWORK CONNECTIONS..... 51
11.1 Networking constraints 52
11.2 NMEA 2000 / SeaTalk NG connection 53
11.3 NMEA 0183 connection 53
11.4 Network connection.....54
Cable suppression ferrites.....55
11.5 Power over Ethernet (PoE) 55
Power over Ethernet (PoE) connections 56
11.6 Internet connection.....56
YachtSense Link network connection 57
Connecting to the internet using Wi-Fi.....57
Wi-Fi settings (Axiom 2-Series displays) 57

CHAPTER 12 VIDEO CONNECTIONS 58
12.1 Axiom XL vs Axiom 2 XL video connections.....59
12.2 Analog video (Video 2) connection 59
12.3 Analog video (Video 1) connection 60
12.4 HDMI IN connection 60
STV connection 61
12.5 HDMI OUT connection 61

CHAPTER 13 USB CONNECTIONS..... 63
13.1 Touch control input connection.....64
13.2 Touch control out connection 64
13.3 Accessory connection 65

Fitting suppression ferrites 65

CHAPTER 14 AUDIO CONNECTIONS 67

14.1 Audio (RCA) connections 68

CHAPTER 15 ALARM BUZZER AND GNSS ANTENNA CONNECTIONS 69

15.1 External alarm connection 70

15.2 GNSS (GPS) antenna connection 70

CHAPTER 16 MAINTAINING YOUR DISPLAY 71

16.1 Service and maintenance 72

Routine equipment checks 72

16.2 Product cleaning 72

Cleaning the display case.....72

Cleaning the display screen.....72

16.3 Sun cover use and maintenance 72

Cleaning the sun cover 73

CHAPTER 17 TROUBLESHOOTING 74

17.1 Troubleshooting 75

17.2 Miscellaneous troubleshooting 75

17.3 LED Diagnostics 76

17.4 Power up troubleshooting 76

Performing a power on reset on touch-only displays 77

Saving crash logs 78

17.5 GNSS (GPS) troubleshooting 78

17.6 Sonar troubleshooting 79

17.7 Wi-Fi troubleshooting 81

17.8 Touchscreen troubleshooting 84

CHAPTER 18 TECHNICAL SUPPORT 85

18.1 Raymarine technical support and servicing 86

Viewing product information 87

Remote Support via AnyDesk.....87

18.2 Learning resources 88

CHAPTER 19 AXIOM 2 XL 16 TECHNICAL SPECIFICATION 89

19.1 Power specification 90

19.2 Environmental specification 90

19.3 LCD specification.....90

19.4 Physical specification 90

19.5 Connections specification 91

19.6 Internal GNSS (GPS) receiver specification 91

19.7 Conformance/approvals 92

19.8 Product markings.....92

CHAPTER 20 AXIOM 2 XL 19 TECHNICAL SPECIFICATION 93

20.1 Power specification 94

20.2 Environmental specification 94

20.3 LCD specification.....94

20.4 Physical specification 94

20.5 Connections specification 95

20.6 Internal GNSS (GPS) receiver specification 95

20.7 Conformance/approvals 96

20.8 Product markings.....96

CHAPTER 21 AXIOM 2 XL 22 TECHNICAL SPECIFICATION 97

21.1 Power specification 98

21.2 Environmental specification 98

21.3 LCD specification 98
21.4 Physical specification 98
21.5 Connections specification 99
21.6 Internal GNSS (GPS) receiver specification 99
21.7 Conformance/approvals 100
21.8 Product markings 100

CHAPTER 22 AXIOM 2 XL 24 TECHNICAL SPECIFICATION 101
22.1 Power specification 102
22.2 Environmental specification 102
22.3 LCD specification 102
22.4 Physical specification 103
22.5 Connections specification 103
22.6 Internal GNSS (GPS) receiver specification 103
22.7 Conformance/approvals 104
22.8 Product markings 104

CHAPTER 23 SPARES AND ACCESSORIES 105
23.1 Accessories 106
23.2 Spares 107
23.3 RayNet to RayNet cables and connectors 108
23.4 RayNet to RJ45, and RJ45 (SeaTalk HS) adapter cables 110
23.5 SeaTalk NG cables and accessories 112

APPENDIX A NMEA 2000 PGNS 117

APPENDIX B LEGACY ES AND GS SERIES COMPATIBILITY WITH AXIOM DISPLAYS 118

APPENDIX C ETHERNET (IPV4) NETWORKING OF RAYMARINE DEVICES WITH THIRD-PARTY PRODUCTS 119

APPENDIX D DOCUMENT CHANGE HISTORY 122

CHAPTER 1: IMPORTANT INFORMATION

Safety warnings

Warning: Product installation and operation

• This product must be installed and operated in accordance with the instructions provided. Failure to do so could result in personal injury or damage to your vessel. It may also cause poor product performance or invalidate the product warranty.

• Raymarine highly recommends certified installation by a Raymarine approved installer. A certified installation qualifies for enhanced product warranty benefits. Register your warranty on the Raymarine website: www.bit.ly/rym-warranty

Warning: High voltage

This product contains high voltage. Adjustments require specialized service procedures and tools only available to qualified service technicians. There are no user serviceable parts or adjustments. The operator should never remove the cover or attempt to service the product.

Warning: Switch off power supply

Ensure that the vessel's power supply is switched OFF before starting to install this product. Do NOT connect or disconnect equipment with the power switched on, unless instructed to do so in this document.

Warning: Potential ignition source

This product is NOT approved for use in hazardous/flammable atmospheres. Do NOT install in a hazardous/flammable atmosphere (such as in an engine room or near fuel tanks).

Product warnings

Warning: FCC Warning (Part 15.21)

Changes or modifications to this equipment not expressly approved in writing by Raymarine UK Ltd could violate compliance with FCC rules and void the user's authority to operate the equipment.

Warning: Positive ground systems

Do NOT connect this unit to a system which has positive grounding.

Warning: Power supply voltage

Connecting this product to a voltage supply greater than the specified maximum rating may cause permanent damage to the unit. For the correct voltage, refer to the information label affixed to the product.

Warning: Marine-grade sealant

Only use marine-grade neutral cure polyurethane sealants. Do NOT use sealants containing acetate or silicone, which can cause damage to plastic parts.

Warning: Product grounding

Before applying power to this product, it MUST be correctly grounded, in accordance with the instructions provided.

Warning: Anti-virus protection

This product does not include protection against computer viruses. Before inserting any memory device, ensure it is free from computer viruses by scanning the device with a suitable anti-virus application with up to date virus definitions.

Caution: Product weight

• Refer to the technical specification for your product to ensure the intended mounting surface is suitable to bear its weight.

• 2 people may be required for installation of larger / heavier products.

Caution: Power supply protection

When installing this product, ensure that the power source is adequately protected by means of a suitably-rated fuse or thermal circuit breaker.

Caution: Service and maintenance

This product contains no user serviceable components. Please refer all maintenance and repair to authorized Raymarine dealers. Unauthorized repair may affect your warranty.

Caution: Product cleaning

When cleaning products:

• Switch off power supply.

• Use a clean damp cloth to wipe clean.

• Do NOT use: abrasive, acidic, ammonia, solvent or other chemical-based cleaning products.

• Do NOT use a jet wash.

Regulatory notices

Regulatory e-Label

All the applicable regulatory and compliance standards for your product are listed in electronic format in a regulatory “e-label” document, which can be viewed on your product’s display.

To access the Regulatory e-Label for your product:

From the Homescreen: *[Settings > Getting Started > Regulatory Approvals]*

Declaration of Conformity

Raymarine UK Ltd declares that the products listed below are in conformity with the relevant sections of the listed designated standards and / or other normative documents:

- Axiom 2 XL 16 multifunction display / chartplotter, part number E70661
- Axiom 2 XL 19 multifunction display / chartplotter, part number E70662
- Axiom 2 XL 22 multifunction display / chartplotter, part number E70663
- Axiom 2 XL 24 multifunction display / chartplotter, part number E70664

Region	Standard	Mark
UK	Radio Equipment Regulations 2017	UK CA
EU	Radio Equipment Directive (RED) 2014/53/EU	CE

The original Declaration of Conformity certificates may be viewed at: www.bit.ly/axiom-2-xl-conformity

Network interfaces and services

Declaration of Network Interfaces and Services used by this product.

Devices connected to the product using a RayNet (Ethernet) cable or via Wi-Fi use the following network interfaces and services. These interfaces and services are required for proper product operation, and cannot be disabled.

Interfaces

- RayNet (Ethernet)
- Wi-Fi

Services

Services	RayNet (Ethernet)	Wi-Fi
Raymarine proprietary services	Yes	Yes
DHCP	Yes	Yes
HTTP	Yes	Yes
LLDP	Yes	Yes
NFS	Yes	Yes
RPC Bind	Yes	Yes
SSH	Yes	Yes
Telnet	Yes	Yes
Websocket	Yes	Yes
Protocol Buffers	Yes	Yes

Note:
When you connect a new chartplotter to the network, private information is synchronized with the newly-added device.

PSTI Compliance

For products sold into the United Kingdom (UK), use the following link to obtain the product's Statement of Compliance with the *Product Security and Telecommunications Infrastructure* (PSTI) Regulations:

Visit the following web address and enter the product's model name or number (SKU) into the provided search field:

- www.bit.ly/rym-sec-com

RF exposure

This equipment complies with FCC / ISED RF exposure limits for general population / uncontrolled exposure. The wireless LAN / Bluetooth antenna is mounted behind the front facia of the display. This equipment should be installed and operated with a minimum distance of 1 cm (0.39 in) between the device and the body. This transmitter must not be co-located or operating in conjunction with any other antenna or transmitter, except in accordance with FCC multi-transmitter product procedures.

Compliance Statement (Part 15.19)

This device complies with Part 15 of the FCC Rules. Operation is subject to the following two conditions:

1. This device may not cause harmful interference.
2. This device must accept any interference received, including interference that may cause undesired operation.

FCC Interference Statement (Part 15.105 (b))

This equipment has been tested and found to comply with the limits for a Class B digital device, pursuant to Part 15 of the FCC Rules.

These limits are designed to provide reasonable protection against harmful interference in a residential installation. This equipment generates, uses, and can radiate radio frequency energy and, if not installed and used in accordance with the instructions, may cause harmful interference to radio communications. However, there is no guarantee that interference will not occur in a particular installation. If this equipment does cause harmful interference to radio or television reception, which can be determined by turning the equipment off and on, the user is encouraged to try to correct the interference by one of the following measures:

1. Reorient or relocate the receiving antenna.
2. Increase the separation between the equipment and receiver.
3. Connect the equipment into an outlet on a circuit different from that to which the receiver is connected.
4. Consult the dealer or an experienced radio / TV technician for help.

Innovation, Science and Economic Development Canada (ISED)

This device complies with License-exempt RSS standard(s).

Operation is subject to the following two conditions:

1. This device may not cause interference; and
2. This device must accept any interference, including interference that may cause undesired operation of the device.

This Class B digital apparatus complies with Canadian ICES-003(B) / NMB-003(B).

Innovation, Sciences et Développement économique Canada (Français)

Cet appareil est conforme aux normes d'exemption de licence RSS.

Son fonctionnement est soumis aux deux conditions suivantes:

1. cet appareil ne doit pas causer d'interférence, et
2. cet appareil doit accepter toute interférence, notamment les interférences qui peuvent affecter son fonctionnement.

Cet appareil numérique de la classe B est conforme à la norme NMB-003 du Canada.

Disclaimer

Raymarine does not warrant that this product is error-free or that it is compatible with products manufactured by any person or entity other than Raymarine.

Raymarine is not responsible for damages or injuries caused by your use or inability to use the product, by the interaction of the product with products manufactured by others, or by errors in information utilized by the product supplied by third parties.

Third-party hardware, such as converters, adapters, routers, switches, Access Points etc., provided by third parties, may be made available directly to you by other companies or individuals under separate terms and conditions, including separate fees and charges. Raymarine UK Ltd or its affiliates have not tested or screened the third-party hardware.

Raymarine has no control over, and is not responsible for:

- (a) the content and operation of such third-party hardware; or:
- (b) the privacy or other practices of such third-party hardware.

The fact that Raymarine's documentation may make reference to such third-party hardware does not indicate any approval or endorsement of any such third-party hardware. Raymarine may reference such third-party hardware only as a convenience.

THIS INFORMATION IS MADE AVAILABLE BY Raymarine ON THE BASIS THAT YOU EXCLUDE TO THE FULLEST EXTENT LAWFULLY PERMITTED ALL LIABILITY WHATSOEVER FOR ANY LOSS OR DAMAGE HOWSOEVER ARISING OUT OF THE USE OF THIS INFORMATION OR RELIANCE UPON THIS INFORMATION.

Raymarine does not exclude **Raymarine**'s liability (if any) to you for personal injury or death resulting from **Raymarine UK Ltd** negligence, for fraud or for any matter which it would be illegal to exclude or to attempt to exclude.

Electronic chart data

Raymarine does not warrant the accuracy of such information, and is not responsible for damages or injuries caused by errors in chart data or information utilized by the product and supplied by third parties. Use of electronic charts provided by third parties is subject to the supplier's End-User License Agreement (EULA).

Warranty policy and registration

Visit the Raymarine website to **read the latest warranty policy**, and **register** your product's warranty online: www.bit.ly/rym-warranty

It is important that you register your product to receive full warranty benefits. Your product package includes a barcode label indicating the serial number of the unit. This serial number is also provided on a label affixed to the product itself. You will need this serial number when registering your product online.

Product disposal

Dispose of this product in accordance with the WEEE Directive.

The Waste Electrical and Electronic Equipment (WEEE) Directive requires the recycling of waste electrical and electronic equipment which contains materials, components and substances that may be hazardous and present a risk to human health and the environment when WEEE is not handled correctly.

Equipment marked with the crossed-out wheeled bin symbol indicates that the equipment should not be disposed of in unsorted household waste. Local authorities in many regions have established collection schemes under which residents can dispose of waste electrical and electronic equipment at a recycling center or other collection point. For more information about suitable collection points for waste electrical and electronic equipment in your region, refer to the Raymarine website: https://bit.ly/rym-recycling

IMO and SOLAS

The equipment described within this document is intended for use on leisure marine boats and workboats NOT covered by International Maritime Organization (IMO) and Safety of Life at Sea (SOLAS) Carriage Regulations.

Technical accuracy

To the best of our knowledge, the information in this document was correct at the time it was produced. However, Raymarine cannot accept liability for any inaccuracies or omissions it may contain. In addition, our policy of continuous product improvement may change specifications without notice. As a result, Raymarine cannot accept liability for any differences between the product and this document. Please check the Raymarine website to ensure you have the most up-to-date version(s) of the documentation for your product: www.docs.raymarine.com

Publication copyright

Copyright ©2026 Raymarine UK Ltd. All rights reserved. No parts of this material may be copied, translated, or transmitted (in any medium) without the prior written permission of Raymarine UK Ltd.

CHAPTER 2: DOCUMENT INFORMATION

CHAPTER CONTENTS

- 2.1 Applicable products — page 15
- 2.2 Document information — page 15
- 2.3 Document conventions — page 15
- 2.4 Document illustrations — page 15
- 2.5 Product documentation — page 15
- 2.6 Operation instructions — page 16

2.1 Applicable products

This document is applicable to the following products:

- Axiom® 2 XL 16 multifunction display, part number E70661
- Axiom® 2 XL 16 multifunction display kit, part number T70545
- Axiom® 2 XL 19 multifunction display, part number E70662
- Axiom® 2 XL 19 multifunction display kit, part number T70546
- Axiom® 2 XL 22 multifunction display, part number E70663
- Axiom® 2 XL 22 multifunction display kit, part number T70547
- Axiom® 2 XL 24 multifunction display, part number E70664
- Axiom® 2 XL 24 multifunction display kit, part number T70548

2.2 Document information

This document contains important information related to the installation of your Raymarine product.

The document includes information to help you:

- Plan your installation and ensure you have all the necessary equipment.
- Install and connect your product as part of a wider system of connected marine electronics.
- Troubleshoot problems and obtain technical support if required.

This and other Raymarine product documents are available to download in PDF format from www.bit.ly/rym-docs

2.3 Document conventions

The following conventions are used throughout this document.

Formatting of user interface menus and settings.

References to menus, setting options and physical buttons are formatted using square brackets [].
Examples:

- "You can select your desired cartography from the *[Cartography selection]* menu."
- "MFD apps are accessed from the *[Homescreen]*."
- "Press the *[Home]* button to return to the Homescreen."

Procedures for performing specific tasks using the product's user interface.

The term "**Select**" is used to refer to the action of:

- Touchscreen control — using your finger to select a menu option or item on the screen.
- Physical buttons — Highlighting an item using the navigational controls and confirming the selection by pressing the *[OK]* button.

Examples:

- "Select *[Ok]* to confirm your selection."
- "Select *[Set-up]*."

Procedures for navigating menu hierarchies.

Menu hierarchies are used in this document to provide a quick summary on how to access a particular function or menu option.
Examples:

- "The internal sonar module is disabled using the Fishfinder app menu: *[Menu > Set-up > Sounder Set-up > Internal Sounder]*."
- "The internal GPS can be switched off from the GPS settings menu: *[Homescreen > Status area > Satellites > Settings > Internal GPS]*."

2.4 Document illustrations

While every effort is made to ensure that the illustrations provided in this publication accurately reflect the final released product, due to editorial and production lead times, your product — and if applicable — its user interface, may differ slightly from the illustrations provided in this document, depending on product variant and date of manufacture.

All images are provided for illustration purposes only.

2.5 Product documentation

The following documentation is applicable to your product:

Applicable documents

- **87445** — Axiom® 2 XL Installation Instructions (This document)
- **81406** — LightHouse™ 4 Operation Instructions
- **81409** — LightHouse™ 4 Basic Operation Instructions

- **87438** — Axiom® 2 XL 16 Mounting Template
- **87439** — Axiom® 2 XL 19 Mounting Template
- **87440** — Axiom® 2 XL 22 Mounting Template
- **87441** — Axiom® 2 XL 24 Mounting Template

Related documents

- **81367** — RMK-10 Remote Keypad Installation and Operation Instructions
- **87317** — RCR-SD/USB card reader Installation Instructions

All product documentation is available from the Raymarine website: www.bit.ly/rym-docs

2.6 Operation instructions

For instructions on how to operate your product, refer to the separate *Operation Instructions* document.

Please check the website to ensure you have the latest documentation:

Document	Number	Link
LightHouse 4 Operation Instructions	81406	www.bit.ly/LH4-docs

Multifunction display / chartplotter software version

To ensure optimum performance and compatibility with external devices, your MFD / chartplotter must be using the latest software version.

Visit www.bit.ly/rym-software to download the latest software.

CHAPTER 3: PRODUCT AND SYSTEM OVERVIEW

CHAPTER CONTENTS

- 3.1 Product overview — page 18
- 3.2 Additional components — page 19
- 3.3 Typical systems — page 19

3.1 Product overview

The Axiom® 2 XL is a range of large touchscreen glass bridge-style multifunction displays.

Axiom® 2 XL features include:

- Full range of navigation, sonar, radar, data, entertainment and other apps available, via the embedded LightHouse operating system.
- Available in 16, 19, 22 and 24 inch screen sizes.
- Hexacore (6-core) processor.
- 64 GByte internal solid state storage, for user data.
- Edge-to-edge glass construction.
- Multi-point touchscreen.
- Optional physical controls available via RMK-10 remote keypad accessory (A80438)
- Full HD IPS display.
- Hydrotough™ nano-coated, impact-resistant glass screen, which repels water, oil, and smudges for better viewing and accurate touch controls.
- Ambient light sensor for automatic brightness adjustment.
- Wide viewing angles.
- HDMI input and output.
- USB input and output for touch control:
  - View and control your Axiom® 2 XL display from a third-party compatible touchscreen monitor, using the HDMI output and USB input connections.
  - View and control a PC or other device from your Axiom® 2 XL display touchscreen, using the HDMI input and USB output connections.
- Analog audio output (via RCA connectors on power / video / audio cable connected to third-party external amplifier / entertainment system).
- 2 x Analog video inputs (via BNC connectors); one via supplied power / video / audio cable, and a second via optional alarm / video cable (A80235)*.
- GNSS (GPS) external passive antenna connection, via optional GNSS (GPS) antenna (A80288)**.
- External alarm connection for optional Alarm buzzer (E26033)*, via optional alarm / video cable (A80235)*.
- 3 x Gigabit Power over Ethernet (PoE) network (RayNet) connections, for powering up to 3 PoE devices using the RayNet network connections (shared 32 W maximum power output).
- NMEA 2000 DeviceNet connection (or SeaTalk NG, via the supplied adapter cable).
- NMEA 0183 connection available, via optional NMEA 0183 to NMEA 2000 convertor (A80721).
- External SD card reader connection, via optional RCR-SDUSB card reader (A80440)*.
- Waterproof to IPx6 and IPx7 (suitable for above or below decks installation).

Note:

- * items marked with a single asterisk are supplied with the following product variants: T70545, T70546, T70547, T70548, and the T70431 Axiom® XL Accessory pack.
- ** items marked with a double asterisk are supplied with the optional T70431 Axiom® 2 XL Accessory pack.
- For further information on accessories and cables, refer to: **p.105 — Spares and accessories**

3.2 Additional components

Additional components are available for the Axiom® 2 XL range, which, depending on your system, may be essential for certain features.

Note:

• Items 1, 2, 3 and 4 are available as an accessory pack (part number T70431).

• Items 1, 2 and 3 are included with the display when ordering Axiom® 2 XL MFD kits (part numbers: T70545, T70546, T70547 and T70548).

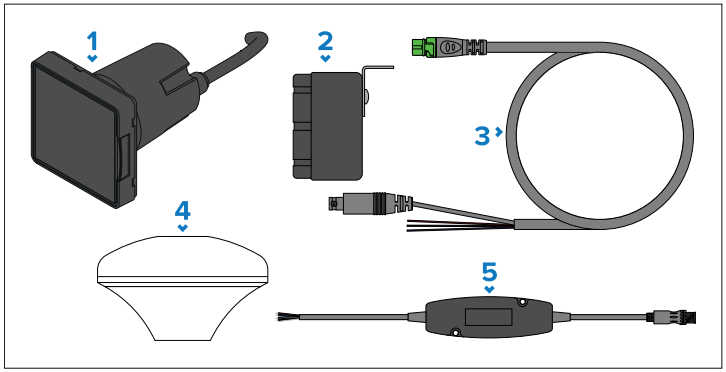

1. **RCR-SD/USB external card reader (A80440)** — Axiom® 2 XL displays do not have a built-in card reader. The following functions require an external remote card reader to be connected to the display:
   - *Use of electronic cartography*. Alternatively, cartography can be shared from a networked display that has electronic cartography saved to internal storage, or has a card reader attached.
   - *Updating product software*. Alternatively, if your display has a connection to the Internet, you can check online for software updates.
   - *Import and export user data (waypoints, routes and tracks)*. Alternatively, user data can be imported and exported from a networked display that does have a card reader attached.
   - *Backup and restore settings*. Alternatively, settings can be backed up and restored from a networked display that does have a card reader attached.
   - *Viewing PDF files*.
   - *Capturing and viewing screenshots or images (.png, .jpg files)*.
   - *Recording and viewing video files (.mov files)*.
   - *Installation of third-party LightHouse app (.apk files)* (for installation only; apps cannot be run directly from storage device).

   In addition to the storage uses listed above, the USB slot on the RCR-SDUSB can also supply 0.5 A of current to charge mobile devices.
2. **Alarm buzzer (E26033)** — An external alarm buzzer is required to hear audible display alarms.
3. **Alarm/analog video in (A80235)** — This cable is required to connect the external alarm buzzer to the display. The cable also allows input of an analog video signal, via a BNC connector.
4. **GA150 GNSS antenna (A80288)** — If you intend to use the Axiom® 2 XL's **internal** GNSS receiver then an external antenna is required. Alternatively, the display can obtain a position fix from another source of GNSS (GPS) data on the same network.
5. **DeviceNet to NMEA 0183 convertor (A80721)** — Enables the Axiom® 2 XL to use data provided by external NMEA 0183 devices. The convertor must be connected to the same NMEA 2000 / SeaTalk NG CAN bus network as the Axiom® 2 XL display(s).

3.3 Typical systems

The illustrations show typical system examples.

Note:
Power supply connection are not shown in the examples. For details on how to connect power to your devices refer to the power connection details in the instructions that were supplied with your devices.

Example basic system

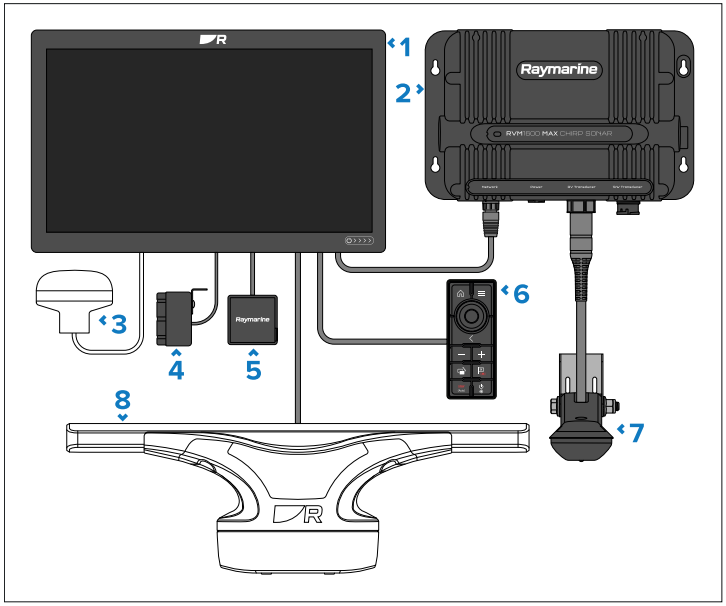

1. Axiom® 2 XL display
2. External Raymarine sonar module (RVM1600 illustrated)
3. External GNSS antenna (e.g.: GA200, part number A80589)
4. Alarm buzzer (part number E26033)
5. RCR-SD/USB external card reader (part number A80440)
6. RMK-10 display remote (part number A80438 / T70293)
7. Raymarine sonar transducer (RVM-100 illustrated)
8. Raymarine radar scanner (Cyclone™ illustrated)

Example expanded system

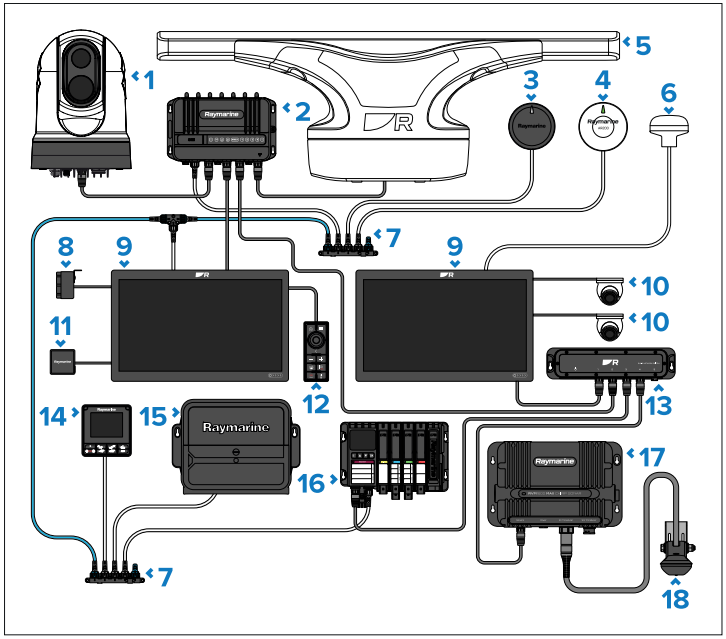

1. Raymarine thermal camera (M300 illustrated)
2. YachtSense™ Link Marine Router
3. EV-1 Evolution™ autopilot (AHRS)
4. AR200 (augmented reality sensor)
5. Raymarine radar scanner (Cyclone™ illustrated)
6. External GNSS antenna (e.g.: GA200, part number A80589)
7. SeaTalk NG 5-way blocks (terminated SeaTalk NG CAN bus network)
8. Alarm buzzer (part number E26033)
9. Axiom® 2 XL displays
10. PoE IP cameras (CAM300 illustrated)
11. RCR-SD/USB external card reader (part number A80440)
12. RMK-10 display remote (part number A80438 / T70293)
13. Raymarine network switch (RNS-5 illustrated)

14. Autopilot controller (p70s illustrated)
15. ACU Evolution autopilot (drive not shown)
16. YachtSense™ Digital Control System (Master module assembly illustrated)
17. External Raymarine sonar module (RVM1600 illustrated)
18. Raymarine sonar transducer (RVM-100 illustrated)

Note:
Only the Datamaster MFD/Chartplotter requires a connection to the NMEA 2000 / SeaTalk NG network. Other MFDs/Chartplotters can be connected for data redundancy; however only the Datamaster MFD/Chartplotter will receive data from NMEA 2000 / SeaTalk NG devices. The Datamaster MFD/Chartplotter can bridge the data over the ethernet network to other MFDs/Chartplotters in the system.

CHAPTER 4: PARTS SUPPLIED

CHAPTER CONTENTS

- 4.1 Parts supplied — page 23
- 4.2 Additional parts supplied in MFD kit — page 23

4.1 Parts supplied

The following parts are supplied in the box.

Unpack your product carefully to prevent damage or loss of parts. Check the box contents against the list below. Retain the packaging and documentation for future reference.

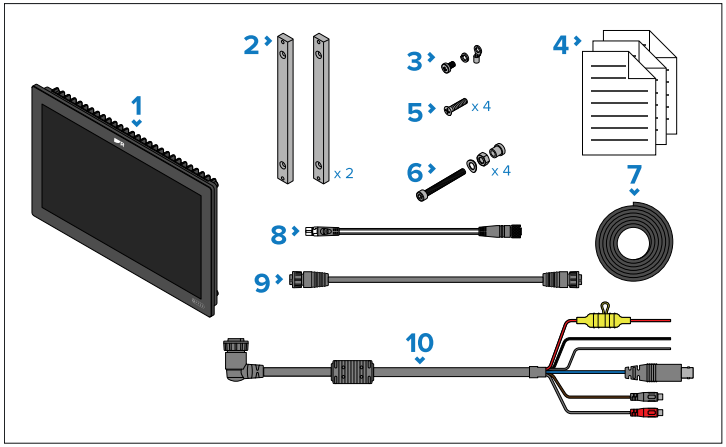

	Description
1	Axiom 2 XL display
2	Rear mount brackets
3	M3 x 5 screw, M3 spring washer and M3 crimp terminal (for optional grounding connection)
4	Documentation
5	Mounting bar fixings x4 (M5 x 20 pozi countersunk)
6	Mounting fixings x 4 (Including M5 x 35 Bolts, M5 wavy washers, M5 nuts and mounting feet)
7	Mounting gasket tape
8	SeaTalk NG to DeviceNet adaptor cable, 1 m (3.3 ft)
9	RayNet network cable, 2 m (6.6 ft)
10	Right-angled power / video / audio cable, 1.5 m (4.92 ft)

4.2 Additional parts supplied in MFD kit

The following additional parts are supplied in the box only when ordering the Axiom® 2 XL MFD kits (part numbers: T70545, T70546, T70547 and T70548:

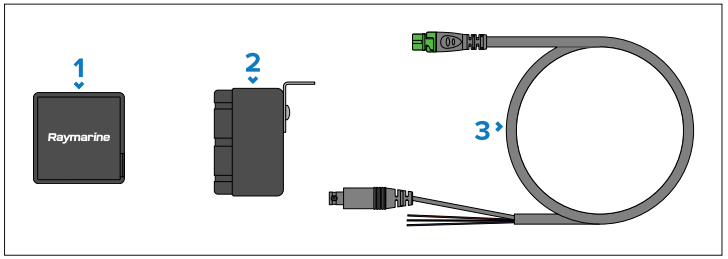

	Description
1	RCR-SD/USB external card reader (part number A80440)
2	Alarm buzzer (part number E26033)
3	Alarm / analog video in cable (part number A80235)

CHAPTER 5: PRODUCT DIMENSIONS

CHAPTER CONTENTS

- 5.1 Display dimensions — page 25
- 5.2 Alarm buzzer dimensions — page 26
- 5.3 Card reader dimensions — page 26

5.1 Display dimensions

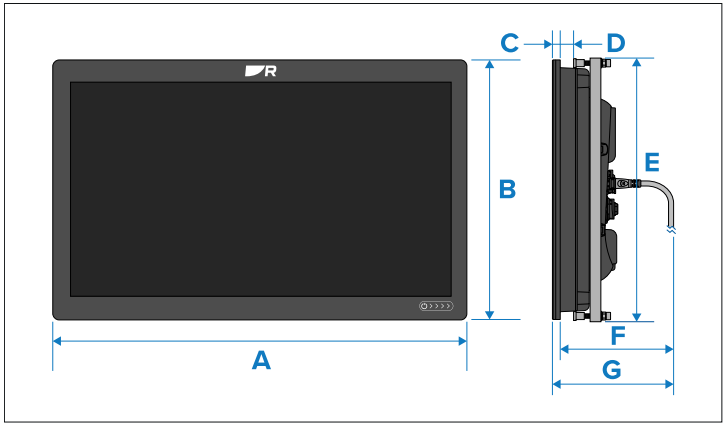

	16” Display	19” Display	22” Display	24” Display
A	394.9 mm (15.55 in)	461.78 mm (18.18 in)	533.56 mm (21.00 in)	578.40 mm (22.77 in)
B	248.22 mm (9.77 in)	289.44 mm (11.40 in)	326.33 mm (12.85 in)	386.84 mm (15.23 in)
C	9 mm (0.35 in)	9 mm (0.35 in)	9 mm (0.35 in)	9 mm (0.35 in)
D	Min. 6 mm (0.24 in) Max. 19 mm (0.75 in)	Min. 6 mm (0.24 in) Max. 19 mm (0.75 in)	Min. 6 mm (0.24 in) Max. 19 mm (0.75 in)	Min. 6 mm (0.24 in) Max. 19 mm (0.75 in)
E	253 mm (9.96 in)	294 mm (11.57 in)	331 mm (13.03 in)	392 mm (15.43 in)
F	98.54 mm (3.88 in) to 179.26 mm (7.06 in)	98.54 mm (3.88 in) to 179.26 mm (7.06 in)	98.54 mm (3.88 in) to 179.26 mm (7.06 in)	100.99 mm (3.98 in) to 182.01 mm (7.17 in)
G	107.54 mm (4.23 in) to 188.26 mm (7.41 in)	107.54 mm (4.23 in) to 188.26 mm (7.41 in)	107.54 mm (4.23 in) to 188.26 mm (7.41 in)	109.99 mm (4.33 in) to 191.01 mm (7.52 in)

Note:

- Dimension D above shows the minimum and maximum thickness of the mounting surface when surface mounting the display.
- Dimensions C+D show the minimum and maximum mounting surface thickness when flush mounting the display.

Note:

- Dimension F & G are the depths required for surface mounting and flush mounting. These depths are variable based on the cable connections required and types of cable used in the installation.
- The minimum possible depth reflects an installation with **only** a right-angled power cable connected and no card reader connected.
- The maximum depth reflects an installation with HDMI cable connected.

Dimension F — examples

For examples of dimension G, add 9.00 mm (0.35 in) to the values below.

	16” Display	19” Display	22” Display	24” Display
HDMI IN / OUT cables connected	179.26 mm (7.06 in)	179.26 mm (7.06 in)	179.26 mm (7.06 in)	191.01 mm (7.52 in)
GPS antenna cable connected	159.58 mm (6.28 in)	159.58 mm (6.28 in)	163.16 mm (6.42 in)	165.91 mm (6.53 in)

	16” Display	19” Display	22” Display	24” Display
Card reader accessory connected	141.31 mm (5.56 in)	141.31 mm (5.56 in)	141.31 mm (5.56 in)	144.06 mm (5.67 in)
Right-angle power cable connected	98.54 mm (3.88 in)	98.54 mm (3.88 in)	98.54 mm (3.88 in)	100.99 mm (3.98 in)

5.2 Alarm buzzer dimensions

Dimensions for the Alarm buzzer are provided below.

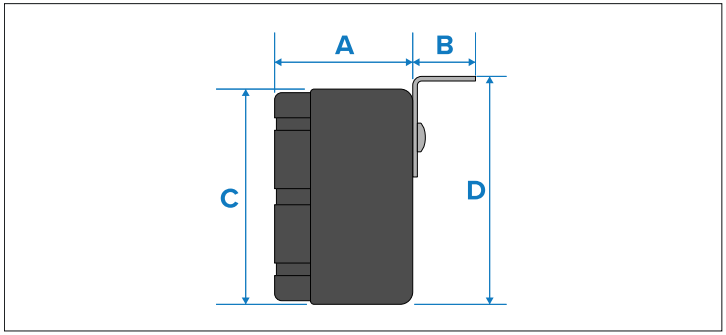

	Measurement
A	38.00 mm (1.50 in)
B	18.00 mm (0.71 in)
C	60.00 mm (2.36 in)
D	63.00 mm (2.48 in)

5.3 Card reader dimensions

The External card reader dimensions are provided below.

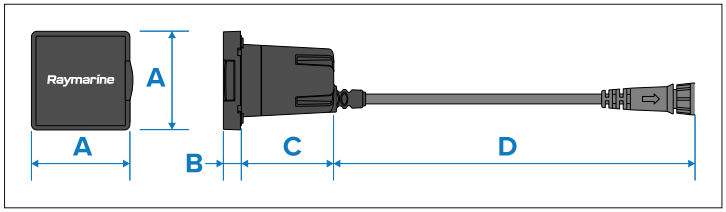

	Measurement
A	55.00 mm (2.165 in)
B	10.00 mm (0.39 in
C	53.00 mm (2.09 in)
D	2.00 m (6.56 ft)

CHAPTER 6: LOCATION REQUIREMENTS

CHAPTER CONTENTS

- 6.1 Warnings and cautions — page 28
- 6.2 General location requirements — page 28
- 6.3 Compass safe distance — page 28
- 6.4 Magnetic sun covers — page 29
- 6.5 24” display above decks installation requirements — page 29
- 6.6 GNSS (GPS) location requirements — page 29
- 6.7 Touchscreen location requirements — page 30
- 6.8 Wireless location requirements for optimum performance — page 30
- 6.9 Viewing angle considerations — page 31
- 6.10 EMC installation guidelines — page 31
- 6.11 Card reader location requirements — page 32
- 6.12 Alarm buzzer location requirements — page 32

6.1 Warnings and cautions

Important:
Before proceeding, ensure that you have read and understood the warnings and cautions provided in the following section of this document:

• **p.9 — Important information**

Warning: Potential ignition source

This product is NOT approved for use in hazardous/flammable atmospheres. Do NOT install in a hazardous/flammable atmosphere (such as in an engine room or near fuel tanks).

6.2 General location requirements

When selecting a location for your product it is important to consider a number of factors.

Factors for consideration:

- **Ventilation** — To ensure adequate airflow:
  - Ensure that product is mounted in a compartment of suitable size.
  - Ensure that ventilation holes are not obstructed. Allow adequate separation of all equipment.

  Any specific requirements for each system component are provided later in this chapter.
- **Mounting surface** — Ensure product is adequately supported on a secure surface. Do not mount units or cut holes in places which may damage the structure of the vessel.
- **Cabling** — Ensure the product is mounted in a location which allows proper routing, support and connection of cables:
  - Minimum bend radius of 100 mm (3.94 in) unless otherwise stated.
  - Use cable clips to prevent stress on connectors.
  - If your installation requires multiple ferrites to be added to a cable then additional cable clips should be used to ensure the extra weight of the cable is supported.
- **Water ingress** — The product is suitable for mounting both above and below decks. Although the unit is waterproof, it is good practice to locate it in a protected area away from prolonged and direct exposure to rain and salt spray.
- **Electrical interference** — Select a location that is far enough away from devices that may cause interference, such as motors, generators and radio transmitters / receivers.
- **Power supply** — Select a location that is as close as possible to the vessel's DC power source. This will help to keep cable runs to a minimum.

Caution: Product weight

• Refer to the technical specification for your product to ensure the intended mounting surface is suitable to bear its weight.

• 2 people may be required for installation of larger / heavier products.

Rear access requirements

Access to the rear of the display and mounting surface is required to surface and flush mount the display.

Ensure there is sufficient access and space behind the mounting surface to attach and tighten the fixings and also to connect the cables.

6.3 Compass safe distance

To prevent potential interference with the vessel's magnetic compasses, ensure an adequate distance is maintained from the product.

When choosing a suitable location for the product, you must aim to maintain a distance of **at least** 1 m (3.3 ft.) in all directions from any compasses.

For some smaller vessels it may not be possible to locate the product this far away from a compass. In this situation, when choosing the installation location for your product, ensure that the compass is not affected by the product when it is in a powered on state.

6.4 Magnetic sun covers

There are additional location considerations when using a magnetic sun cover with the display.

For more information, refer to:
p.72 — Sun cover use and maintenance

6.5 24” display above decks installation requirements

Note:
The installation requirements below only apply to the 24” display when being installed in an above decks environment.

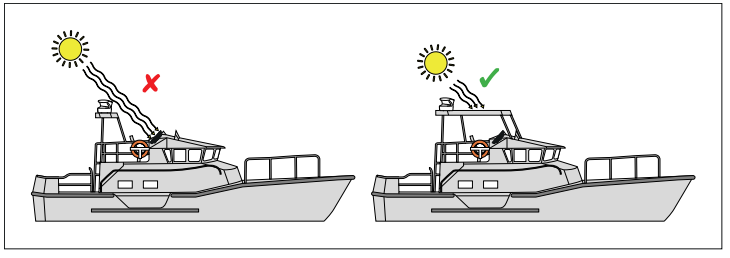

The 24” display is designed to operate in ambient temperatures of up to 55°C / 131°F and with display surface temperatures of up to 65°C / 149°F. However, when the display is exposed to prolonged, direct sunlight the surface of the 24” display may exceed these temperatures. This may cause the LCD to blackout temporarily, until the surface temperature falls to within normal limits. To help mitigate this occurrence it is recommended that when installing in an above decks environment the Axiom XL 24 is mounted in a location protected from direct sunlight e.g.: underneath a hardtop or Bimini (canvas).

Other factors that can help to reduce the surface temperature of your display include ensuring sufficient airflow around the display and reducing the LCD’s brightness level.

6.6 GNSS (GPS) location requirements

Your product includes a built-in GNSS (GPS) receiver that, in order to obtain a position fix, requires connection of an external passive antenna, such as the GA150 antenna.

Ensure you follow the location requirements specified in your external antenna’s installation instructions.

6.7 Touchscreen location requirements

Note:
Touchscreen performance can be affected by the installation environment, specifically Touchscreen displays installed above decks, where it will be open to the elements may exhibit the following:

• Hot Touchscreen temperature — If the display is mounted where it will be exposed to prolonged periods of direct sunlight, the touchscreen may become hot.

• Erroneous Touchscreen performance — Exposure to prolonged rain and / or water wash over may cause the display to respond to 'false touches', caused by the rain/water hitting the screen.

If, due to the required installation location, exposure to these elements is anticipated then it is recommended that you consider:

• Installing a remote keypad such as the RMK-10 and operating the display remotely — Touch-only displays.

• Locking the Touchscreen and using the physical buttons instead — HybridTouch displays.

• Attaching a third-party 'display hood accessory' to reduce direct sunlight exposure and the volume of water that the display is exposed to.

6.8 Wireless location requirements for optimum performance

All wireless devices in your system must be located in such a way that they can reliably receive and/or transmit wireless signals.

A number of factors can influence wireless performance. For example, physical obstacles and certain vessel structures and materials can all negatively impact wireless performance. Therefore, **it's important to check a product's wireless performance at the desired installation location before drilling any mounting holes**.

Vessel construction and materials

Wherever possible, mount products on surfaces constructed from GRP (e.g. fiberglass resin, or foam), or on dry wooden bulkheads. **Conductive materials in the signal path can have a significant impact on wireless signal performance**. Reflective surfaces such as metal surfaces, some types of glass and even mirrors can drastically affect performance or even block the wireless signal. Installation locations that are in close proximity to these materials should be avoided. **Do NOT mount wireless products directly to conductive materials.** This includes any mounting surface or enclosure/pod. Examples of conductive materials include, but are not limited to:

- carbon fibre, kevlar, or aramid (including sails made from these materials)
- aluminium
- steel

In installations with conductive materials, if available, mount the wireless product using an accessory pole mount or deck mounting kit. A clearance of at least 10 cm (3.9 in) is required to minimize the ground effect from conductive materials. This applies to transmitters as well as displays. If moving the product fixes the problem, consider cutting an antenna clearance hole behind the unit (once the product position and mounting have been finalized).
Wireless performance can also be degraded in locations where the wireless signal passes through a bulkhead containing power cables. Crew members (especially when wet) can also be obstructive to wireless signals, if their bodies pass through the signal area between wireless sensor and any associated displays.

Checking and optimizing signal strength

It may be necessary to experiment with the location of your wireless products to achieve optimal wireless performance and a clear signal path.
The distance between wireless products should always be kept to a minimum. Do not exceed the maximum stated range of your wireless product (maximum range will vary for each device).
Wireless performance degrades over distance, so products farther away will receive less network bandwidth. Products installed close to their maximum wireless range may experience slow connection speeds, signal dropouts, or not being able to connect at all.

For best results, the wireless product should have a clear, direct line-of-sight to the product it will be connected to. Any physical obstructions can degrade or even block the wireless signal.
Some wireless products feature a signal strength indicator to assist in the process of determining the location with the best wireless performance. Choose the location with the highest and most consistently strong direct signal reading, during a 5 minute monitoring period. Try alternative locations for the transmitter to maximize the signal strength to the displays; e.g. try locations below a hatch or skylight or near to a window. A small change in product position can result in a significant change in the signal strength.

Note:
Some wireless products (e.g. a Hull Transmitter) will not transmit data unless a transducer is connected. Also consider that an NMEA or SeaTalk NG product (e.g. an interface) will not transmit data unless an appropriate data source is connected.

Interference and other equipment

Interference from other people's wireless devices can cause interference with your products. You can use a third-party wireless analyzer tool / smartphone app to assess the best wireless channel to use (e.g. a channel not in use or one used by the least number of devices).
Wireless products should be installed at least 1 m (3 ft) away from:

- Other wireless-enabled products
- Transmitting products that send wireless signals in the same frequency range
- Other electrical, electronic or electromagnetic equipment that may generate interference.

Software updates

It's also important to ensure all your wireless products are running the latest software versions, as improvements are made over time to wireless performance.

6.9 Viewing angle considerations

As display contrast and color are affected by the viewing angle, before choosing the mounting position of your display, it is recommended that you temporarily power up the display (prior to installation) and experiment with different installation locations, to enable you to best judge which location provides the optimum viewing angle for your specific installation.

For viewing angles for your product, refer to the *Technical specification*.

6.10 EMC installation guidelines

Raymarine equipment and accessories conform to the appropriate Electromagnetic Compatibility (EMC) regulations, to minimize electromagnetic interference between equipment and minimize the effect such interference could have on the performance of your system.

Correct installation is required to ensure that EMC performance is not compromised.

Note:
In areas of extreme EMC interference, some slight interference may be noticed on the product. Where this occurs the product and the source of the interference should be separated by a greater distance.

For **optimum** EMC performance we recommend that wherever possible:

- Raymarine equipment and cables connected to it are:
  - At least 1 m (3.28 ft) from any equipment transmitting or cables carrying radio signals e.g. VHF radios, cables and antennas. In the case of SSB radios, the distance should be increased to 2 m (6.6 ft).
  - More than 2 m (6.56 ft) from the path of a radar beam. A radar beam can normally be assumed to spread 20 degrees above and below the radiating element.
- The product is supplied from a separate battery from that used for engine start. This is important to prevent erratic behavior and data loss which can occur if the engine start does not have a separate battery.
- Raymarine specified cables are used.
- Cables are not cut or extended, unless doing so is detailed in the installation manual.

Note:
Where constraints on the installation prevent any of the above recommendations, always ensure the maximum possible separation between different items of electrical equipment, to provide the best conditions for EMC performance throughout the installation.

RF interference

Certain third-party external electrical equipment can cause Radio Frequency (RF) interference with GNSS (GPS), AIS or VHF devices, if the external equipment is not adequately insulated and emits excessive levels of electromagnetic interference (EMI).

Some common examples of such external equipment include LED lighting (e.g.: navigation lights, searchlights and floodlights, interior and exterior lights) and terrestrial TV tuners.

To minimize interference from such equipment:

- Keep it as far away from GNSS (GPS), AIS or VHF products and their antennas as possible.
- Ensure that any power cables for external equipment are not entangled with the power or data cables for these devices.
- Consider fitting one or more high frequency suppression ferrites to the EMI-emitting device. The ferrite(s) should be rated to be effective in the range 100 MHz to 2.5 GHz, and should be fitted to the power cable and any other cables exiting the EMI-emitting device, as close as possible to the position where the cable exits the device.

6.11 Card reader location requirements

When selecting a location for the external card reader it is important to consider a number of factors.

Factors for consideration:

- **Mounting surface** — Ensure product is adequately supported on a secure surface. Do not mount units or cut holes in places which may damage the structure of the vessel.
- **Cabling** — Ensure the product is mounted in a location which allows proper routing, support and connection of cables:
  - The product should be located close to the display to which it is connected, ensuring that the cable is not stretched or pulled tight.
  - Minimum bend radius of 100 mm (3.94 in) unless otherwise stated.
  - Use cable clips to prevent stress on connectors.
  - If your installation requires multiple ferrites to be added to a cable then additional cable clips should be used to ensure the extra weight of the cable is supported.
- **Water ingress** — The product should be located it in a protected area away from prolonged and direct exposure to rain and salt spray.
- **Electrical interference** — Select a location that is far enough away from devices that may cause interference, such as motors, generators and radio transmitters / receivers.

6.12 Alarm buzzer location requirements

When selecting a location for the alarm buzzer it is important to consider a number of factors.

Factors for consideration:

- **Location** — Ensure the product is mounted in a location where the display operator will be able to easily hear the alarm buzzer when an alarm or warning is triggered.
- **Mounting surface** — Ensure product is adequately supported on a secure surface.
- **Cabling** — Ensure the product is mounted in a location which allows proper routing, support and connection of cables:
  - The product should be located close to the display to which it is connected, ensuring that the cable is not stretched or pulled tight.
  - Minimum bend radius of 100 mm (3.94 in) unless otherwise stated.
  - Use cable clips to prevent stress on connectors.
  - If your installation requires multiple ferrites to be added to a cable then additional cable clips should be used to ensure the extra weight of the cable is supported.

- **Water ingress** — The product should be located it in a protected area away from prolonged and direct exposure to rain and salt spray.
- **Electrical interference** — Select a location that is far enough away from devices that may cause interference, such as motors, generators and radio transmitters / receivers.

CHAPTER 7: MOUNTING PREPARATION

CHAPTER CONTENTS

- 7.1 Tools required — page 35
- 7.2 Rear access requirements — page 35
- 7.3 Mounting options — page 35
- 7.4 Preparing the mounting surface — surface mounting — page 36
- 7.5 Preparing the mounting surface — flush mounting — page 36
- 7.6 Fitting the gasket tape — page 37

7.1 Tools required

The following tools are recommended for installation:

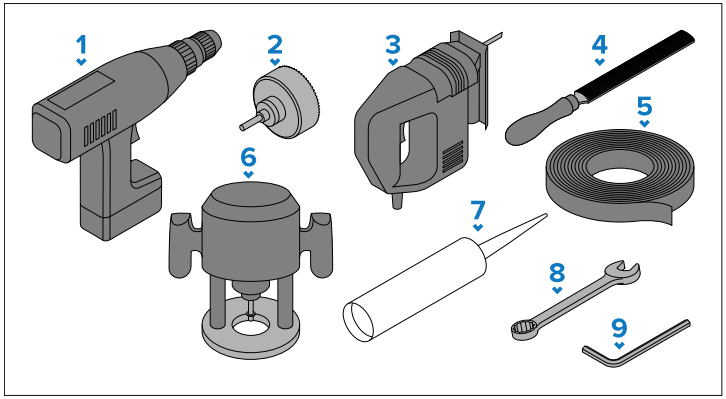

1. Power drill.
2. Hole cutter (appropriate size for corner diameters of the **Cut out** line identified on the supplied mounting template):
   - 15.40 mm (0.61 in) — 16”, 19” and 24” displays.
   - 13.5 mm (0.53 in) — 22” displays.
3. Jigsaw.
4. Half round file (or sandpaper).
5. Masking/self adhesive tape.
6. * Hand router with a router bit an appropriate size for the 14.00 mm (0.55 in) corner diameter required for the flush mount rebate.
7. Marine grade sealant.
8. 8 mm ($^5/_{16}$”) wrench or small adjustable wrench.
9. 4 mm Hex wrench (Allen key).

Note:
* Items are only required when flush mounting the display.

7.2 Rear access requirements

Access to the rear of the display and mounting surface is required to surface and flush mount the display.

Ensure there is sufficient access and space behind the mounting surface to attach and tighten the fixings and also to connect the cables.

7.3 Mounting options

The displays can be mounted flush with the mounting surface (flush mount) or with the glass protruding from the mounting surface (surface mount).

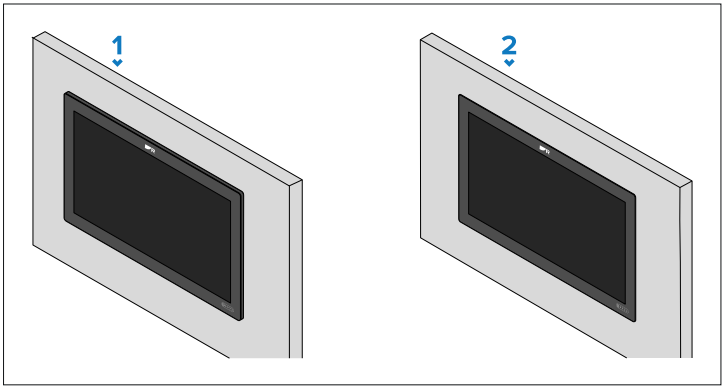

1. Surface mount
2. Flush mount

Warning: 2–person installation required

To prevent potential product damage, vessel damage or personal injury, the installation of this product requires 2 people.

7.4 Preparing the mounting surface — surface mounting

Surface mounting requires one cut out hole. When the display is surface mounted the glass/bezel will protrude from the mounting surface.

Note:
The following procedure is for preparing the mounting surface for surface mount installations. For flush mounting details refer to: **p.36 — Preparing the mounting surface — flush mounting**

Important:
Before preparing the mounting surface ensure that:

- Your selected location meets the location requirements. For details refer to: **p.27 — Location requirements**
- You have identified cable connections and the route that the cables will take.

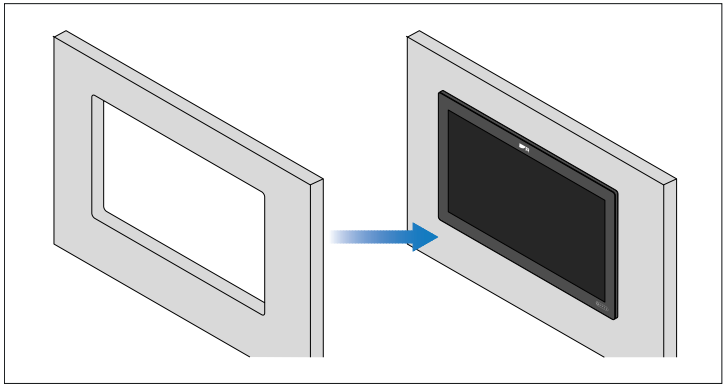

1. Mark the **cutout** line on the mounting surface, as identified on the supplied mounting template.
2. Use a drill and an appropriate size drill bit or hole cutter to cut out the corners of the **Cutout** line.

   The corner diameters for the displays are:

   - *15.40 mm (0.61 in) — 16", 19" and 24" displays.*
   - *13.5 mm (0.53 in) — 22" displays.*
3. Use a jigsaw or similar cutting tool to cut out the remainder of the cutout area.
4. Use a half round file and/or sandpaper to smooth and rough edges or burs on the cutout hole.

7.5 Preparing the mounting surface — flush mounting

Flush mounting requires the same cut out hole as surface mounting and an additional rebate around the edge of the cut out. When the display is flush mounted, the glass will be flush with the mounting surface.

Note:
The following procedure is for preparing the mounting surface for flush mount installations. For surface mounting details refer to: **p.36 — Preparing the mounting surface — surface mounting**

Important:
Before preparing the mounting surface ensure that:

- Your selected location meets the location requirements. For details refer to: **p.27 — Location requirements**
- You have identified cable connections and the route that the cables will take.

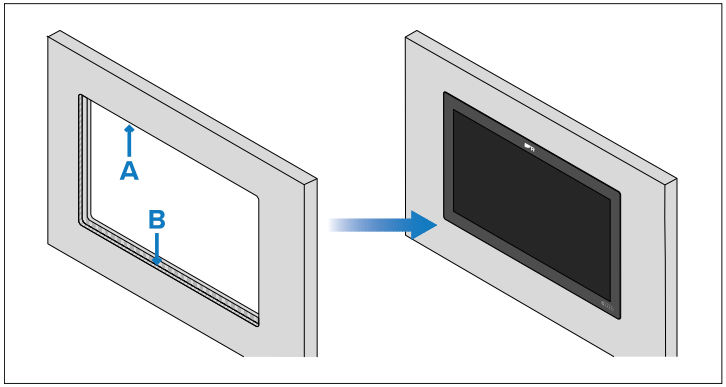

- **A** — Cutout (when flush mounting the cut out will be the same size as for surface mounting.
- **B** — Flush mounting requires an extra rebate to recess the display fully in the mounting surface.

1. Mark the **cutout** line on the mounting surface, as identified on the supplied mounting template.
2. Mark on the mounting surface the **Flush mount rebate** line, as identified on the supplied mounting template.
3. Use a drill and an appropriate size drill bit or hole cutter to cut out the corners of the **Cutout** line.

   The corner diameter for each display is:

   - *15.40 mm (0.61 in) — 16", 19" and 24" displays.*
   - *13.5 mm (0.53 in) — 22" displays.*
4. Use a jigsaw or similar cutting tool to cut out the remainder of the **Cutout** area.
5. Use a router hand tool to recess the marked **Flush mount rebate** area, to a depth of 9.00 mm (0.35 in).
6. Carefully (and temporarily) fit the display to the cutout area, to check for a good fit. **Do not use any fixings at this time.** If the fit is very tight, it may be necessary to remove the display and file the edges of the cutout to achieve a better fit, using a half round file and/or sandpaper. Alternatively, if the fit is loose and there is a visible gap between the edge of the display and the cutout, this will need to be filled with marine-grade sealant or suitable packing material to fill the gap. *This should only be done once the display has been secured to the surface using the fixings, as described in the next mounting procedure.*

7.6 Fitting the gasket tape

Before fitting the display you must fit the mounting gasket tape to the rear of the display, as shown below.

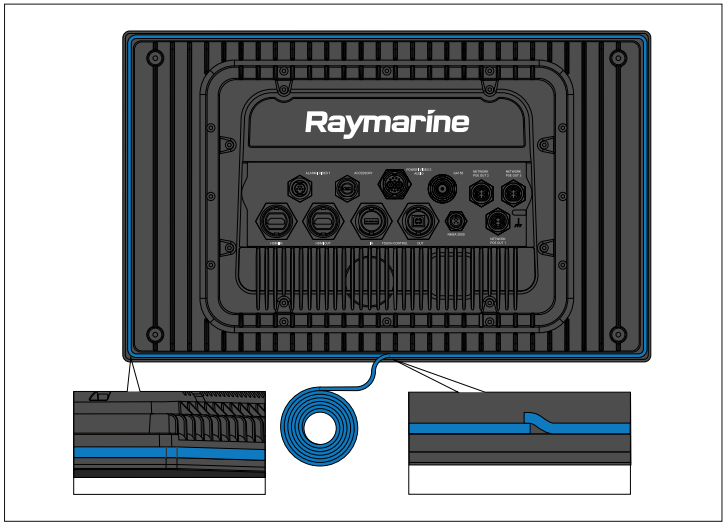

1. Starting at the bottom center, affix the gasket tape to the display.
2. Remove the paper backing from the tape before going around the corners, ensuring that the tape remains tight all around the display, and no air gap exists between display and tape.
3. When you reach the end, leave a small overlap to ensure that no gap exists between the ends of the gasket when it is compressed.

Note:
The supplied gasket tape provides a seal between the unit and a suitably flat and stiff mounting surface or binnacle. **The gasket should be used in all installations**. It may also be necessary to use a marine-grade sealant if the mounting surface or binnacle is not entirely flat and stiff or has a rough surface finish.

CHAPTER 8: MOUNTING

CHAPTER CONTENTS

- 8.1 Mounting the display — page 39
- 8.2 Protective film — page 40
- 8.3 Mounting the card reader — page 40
- 8.4 Mounting the alarm buzzer — page 41

8.1 Mounting the display

The displays are mounted from the rear.

Important:
In above decks installations, marine-grade sealant should be used to seal the gap between the edge of the mounting surface and the edge of the display.

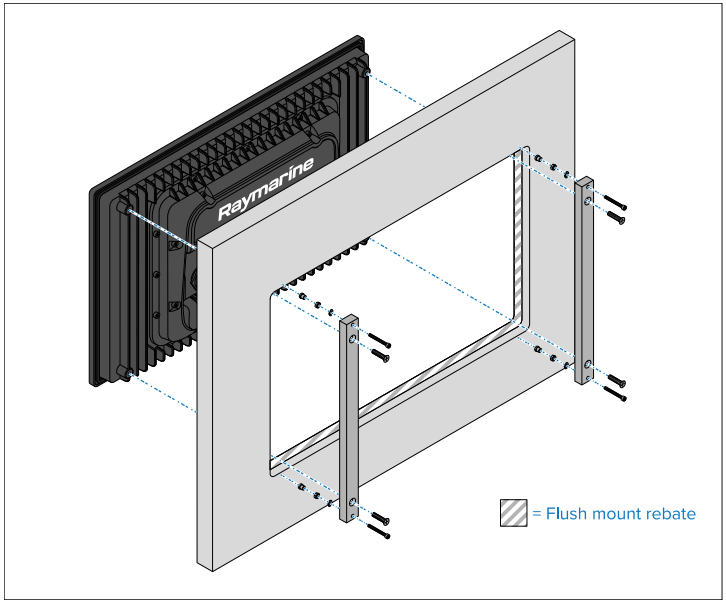

1. Ensure you have followed the relevant instructions for preparing the mounting surface for either surface mounting or flush mounting.
2. Route the relevant cables to behind the mounting surface cut out.

   This may be difficult or not possible once the display has been mounted.
3. With one person holding the display in place, the second person should attach the mounting bars to the back of the display using the supplied countersunk screws, in the 4 locations shown.
4. Secure the display using the provided mounting fixings (M5 bolt, wavy washer, nut and foot, in the 4 locations shown).

   Depending on the thickness of the mounting surface, the washer and nut may be located:

   - between the mounting bracket and mounting feet, as shown in (1) and (2) below, or:
   - after the mounting bracket, as shown in (3) and (4) below.

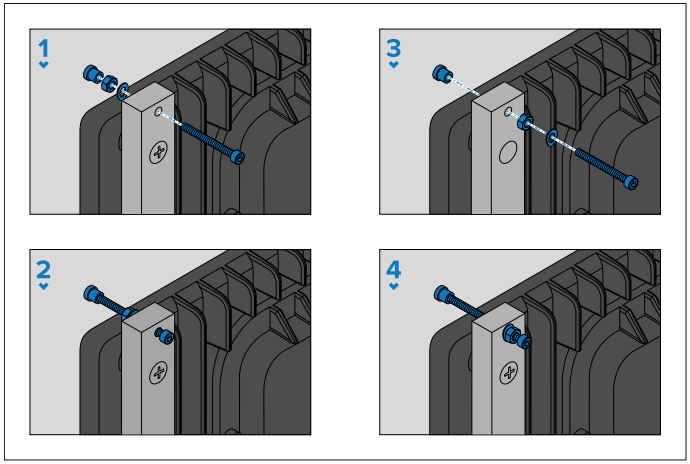

5. Using a 4 mm Hex (Allen) wrench, tighten the mounting bar bolts, ensuring that the feet are tight against the rear of the mounting surface.
6. Using a 8 mm wrench or adjustable wrench, tighten the nut against the washer and the mounting bar to lock in position.

   The nut should be tightened sufficiently to securely hold the display in position.

Warning: Marine-grade sealant

Only use marine-grade neutral cure polyurethane sealants. Do NOT use sealants containing acetate or silicone, which can cause damage to plastic parts.

8.2 Protective film

Displays are supplied with a protective film covering the LCD screen, to protect the display during transit and installation.

Once the display has been successfully installed, the protective film should be removed, to ensure optimum touchscreen performance.

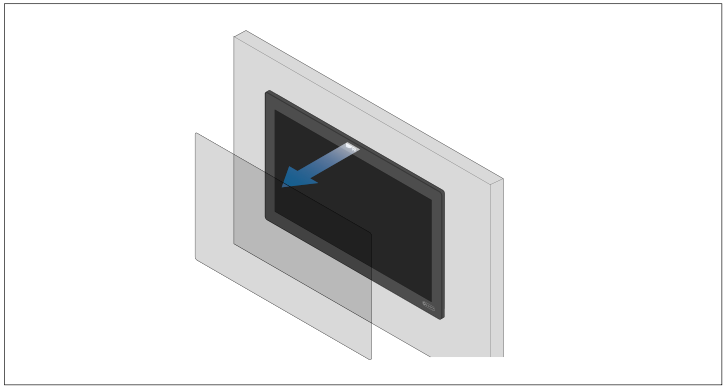

8.3 Mounting the card reader

The card reader can be surface mounted following the steps below:

Note:

• 4 x appropriate size self-tapping screws (not supplied) are required to mount the card reader.

• Drill bit and screw size are dependent upon the thickness and type of material that the card reader is being mounted on.

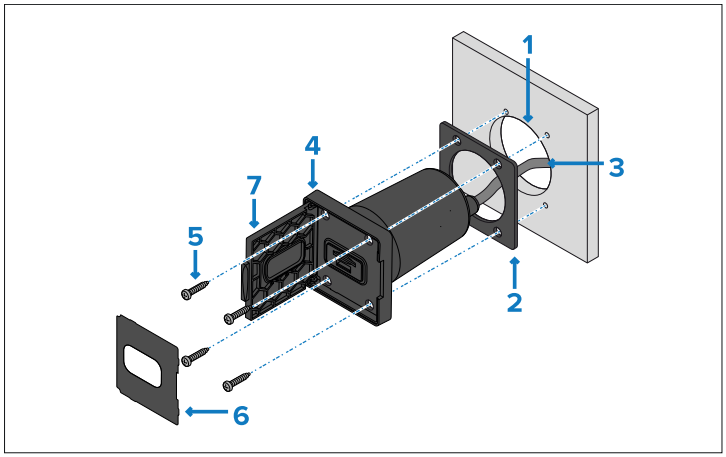

1. Using the supplied card reader mounting template as a guide, cut and drill the cut out hole and fixing pilot holes at the relevant locations on the mounting surface.
2. Attach the gasket to the rear of the card reader.
3. Feed the cable through the hole and connect to the product's Accessory connection.
4. Insert the card reader into the cut out hole.
5. Secure the card reader using appropriate self-tapping screws (not supplied).
6. Insert the card reader inlay.
7. To prevent water ingress and consequent damage to the product, ensure that the card reader door or cover is firmly closed.

8.4 Mounting the alarm buzzer

Follow the steps below to mount the alarm buzzer.

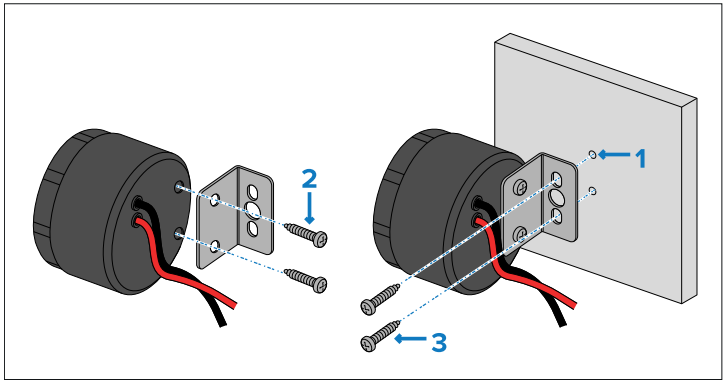

1. Using the bracket as a template mark the fixing hole locations on the mounting surface and drill pilot holes.
2. Attach the mounting bracket to the rear of the alarm buzzer using the screws provided.
3. Mount the alarm buzzer using the screws provided.

CHAPTER 9: CABLES AND CONNECTIONS — GENERAL INFORMATION

CHAPTER CONTENTS

- 9.1 General cabling guidance — page 43
- 9.2 Connections overview — page 44
- 9.3 Connecting cables — page 45
- 9.4 Bare-ended wire connections — page 45

9.1 General cabling guidance

Cable types and length

It is important to use cables of the appropriate type and length.

- Unless otherwise stated only use cables supplied by Raymarine.
- Where it is necessary to use non-Raymarine cables, ensure that they are of correct quality and gauge for their intended purpose. (e.g.: longer power cable runs may require larger wire gauges to minimize voltage drop along the run).

Cable routing and bend radius

To maximize cable performance and lifespan, it's important to ensure that all cables are routed correctly and adequate space is provided to allow for each cable's minimum bend radius.

Minimum cable bend radius

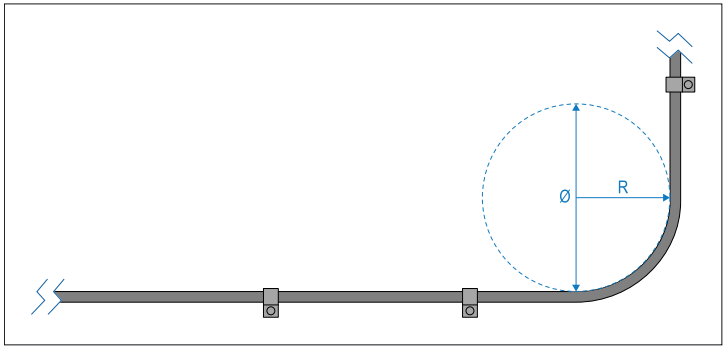

Do NOT bend cables excessively. Wherever possible, ensure that your chosen product installation location allows enough clearance for the minimum cable bend diameter specified in the following table:

	Description	Value
Ø	Cable minimum bend **diameter**.	200 mm (7.87 in.)
R	Cable minimum bend **radius**.	100 mm (3.94 in.)

Note:
For products where multiple different cable types are connected, each with a different minimum cable bend radius, the higher figure is provided in the table above (i.e. the cable with the greatest minimum bend radius is specified).

Cable routing — best practices

- Protect all cables from physical damage and exposure to heat. Use trunking or conduit where possible. Do NOT run cables through bilges or doorways, or close to moving or hot objects.
- Secure cables in place using cable clips or cable ties. Coil any excess cable and tie it out of the way.
- Where a cable passes through an exposed bulkhead or deckhead, use a suitable watertight feed-through (conduit).
- Do NOT run cables near to engines or fluorescent lights.
- Always route data cables as far away as possible from:
  - Other equipment and cables.
  - High current-carrying AC and DC power lines.
  - Antennas.

Strain relief

Use adequate strain relief for cabling to ensure that connectors are protected from strain and will not pull out under extreme sea conditions.

Circuit isolation

Appropriate circuit isolation is required for installations using both AC and DC current:

- Always use isolating transformers or a separate power-inverter to run PCs, processors, displays and other sensitive electronic instruments or devices.
- If using Weather FAX audio cables, always use an isolating transformer.
- If using a third-party audio amplifier, always use an isolated power supply.
- If using an RS232/NMEA converter, always ensure optical isolation on the signal lines.

- Always ensure that PCs or other sensitive electronic devices have a dedicated power circuit.

Cable shielding

Ensure that cable shielding is not damaged during installation and that all cables are properly shielded.

Important:
Be aware that some **third-party** cables and adapters (for example, certain Ethernet cables using RJ45 connectors) are not always shielded. To prevent breaks in cable shielding continuity and potential grounding issues, special attention is required to ensure that any cables, extension cables, adapters, or other signal-coupling devices used in cable runs **maintain all shield connections throughout the cable run**.

9.2 Connections overview

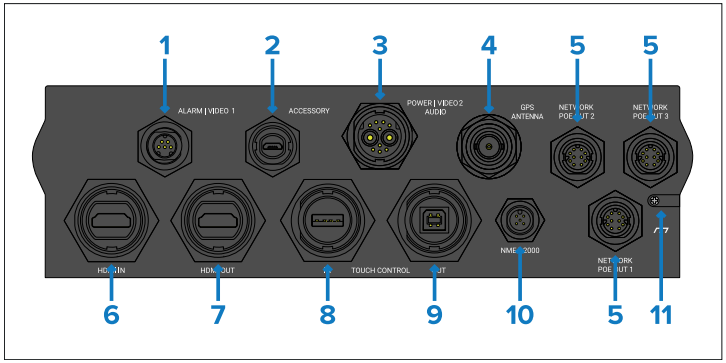

1. **ALARM | VIDEO 1** — The alarm / video 1 connector enables connections of the external alarm buzzer accessory (E26033) and an analog video input via BNC connector, using the alarm / video cable (part number A80235).
2. **ACCESSORY** — The accessory connector enables connection of the external card reader RCR-SD/USB (part number A80440).
3. **POWER | VIDEO 2 | AUDIO** — The power/video 2/audio connector provides a connection to a 12 / 24 V dc power supply, an analog video input via BNC connector, and analog audio output via RCA connectors.

Note:

• Axiom® 2 XL displays are supplied with a Power/video/audio cable that has a right-angled connector. A straight connector cable is also available (A80744).

• The original Axiom® Power/Video/NMEA 0183 cables cannot be used with Axiom® 2 XL displays.

4. **GPS ANTENNA** — The GPS antenna connector enables connection of an external GNSS (GPS) antenna (e.g.: GA200 part number A80589), which allows the display's internal GNSS (GPS) receiver to obtain a position fix.
5. **NETWORK POE OUT** — The 3 x network connectors enable connection of RayNet devices. The Network connectors also provide power to PoE devices.
6. **HDMI IN** — The HDMI in connector enables connection of an external HDMI video source using the HDMI cable (part number A80219). The video source can be displayed in the display's Video app.
7. **HDMI OUT** — The HDMI out connector enables connection of an external HDMI monitor or HDTV using the HDMI accessory cable (part number A80219). The monitor mirrors the display's screen.
8. **TOUCH CONTROL IN** — The touch in connector enables you to control the display with a compatible touchscreen monitor, using the USB A to USB B cable (part number A80578).
9. **TOUCH CONTROL OUT** — The touch out connector enables you to control a compatible device with the display's touchscreen, using the USB B to USB A cable (part number A80579).
10. **NMEA 2000** — The NMEA 2000 connector enables connection to a SeaTalk NG or NMEA 2000 network using the supplied SeaTalk NG to DeviceNet adaptor cable or a suitable DeviceNet cable.
11. **GROUND** — The optional grounding point should only be used when the display experiences touchscreen interference from nearby equipment. The grounding point should be connected to the same RF ground point as the interfering equipment, or the vessel's negative battery terminal.

Note:

• **VIDEO 2** is the primary video connection. The Video feed connected to **VIDEO 2** is encoded as RTSP and streamed over ethernet to networked displays.

• **VIDEO 1** is the secondary video connection and is shared with **HDMI IN**. **HDMI IN** and **VIDEO 1** cannot be used at the same time. If devices are connected to both connections then the **HDMI IN** connection will take priority.

• The video feeds connected to **HDMI IN** and **VIDEO 1** are NOT streamed over ethernet to networked displays.

9.3 Connecting cables

Follow the steps below to connect the cable(s) to your product.

1. Ensure that the vessel's power supply is switched off.
2. Ensure that the device being connected has been installed in accordance with the installation instructions supplied with that device.
3. Ensuring correct orientation, push cable connectors fully onto the corresponding connectors.
4. Engage any locking mechanism to ensure a secure connection (e.g.: turn locking collars clockwise until tight, or in the locked position).
5. Ensure any bare ended wire connections are suitably insulated to prevent shorting and corrosion due to water ingress.

9.4 Bare-ended wire connections

You must ensure that any bare-ended wires are adequately protected from short circuit and water ingress.

Bare-ended wire connections

It is recommended that bare-ended wire connections are made by soldering or using crimp connectors, and then protected by wrapping the connection in electrical insulation tape.

Unused bare-ended wires

Any unused bare-ended wires should be folded back and wrapped in electrical insulation tape.

CHAPTER 10: POWER CONNECTIONS

CHAPTER CONTENTS

- 10.1 Power connection — page 47
- 10.2 Power distribution — page 48
- 10.3 Grounding — optional grounding point — page 50

10.1 Power connection

The supplied power cable is connected to the **POWER | VIDEO 2 | AUDIO** connector located on the rear of the display. The power cable must then be connected to a 12 V dc or 24 V dc power supply; this can be achieved by connecting to a distribution panel, or directly to a battery. The product is protected against reverse polarity.

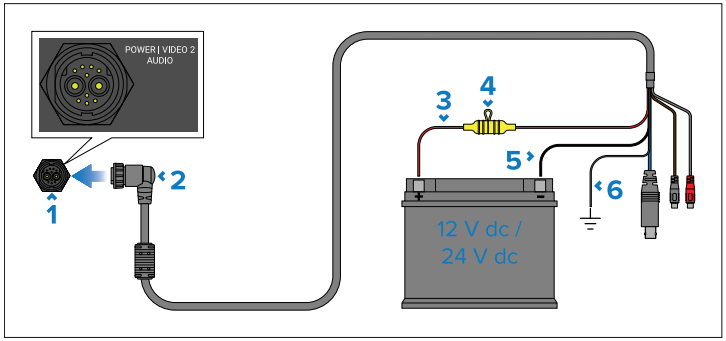

1. Display's **POWER | VIDEO 2 | AUDIO** connector.
2. Power/video/audio cable, 1.5 m (4.9 ft).
3. Positive (Red) wire: connect to the power supply's positive (+) terminal.
4. Fuse.
5. Negative wire: connect to the power supply's negative (-) terminal.
6. Drain wire: connect to RF ground point. If no ground point is available, connect to the battery's negative (-) terminal.

Note:

• Axiom® 2 XL displays are supplied with a Power/video/audio cable that has a right-angled connector. A straight connector cable is also available (A80744).

• The original Axiom® Power/Video/NMEA 0183 cables cannot be used with Axiom® 2 XL displays.

Inline fuse and thermal breaker ratings

The following inline fuse and thermal breaker ratings apply to your product:

Inline fuse rating	Thermal breaker rating
15 A	15 A (if only connecting one device)

Note:

• The suitable fuse rating for the thermal breaker is dependent on the number of devices you are connecting. If in doubt consult an Raymarine technical support.

• Your product's power cable may have a fitted inline fuse. If not, you must fit an inline fuse to the positive wire of your product's power connection.

Caution: Power supply protection

When installing this product, ensure that the power source is adequately protected by means of a suitably-rated fuse or thermal circuit breaker.

10.2 Power distribution

Recommendations and best practice for the power connection of products supplied with a drain wire as part of the supplied power cable.

- The product is supplied with a power cable, either as a separate item or a captive cable permanently attached to the product. Only use the power cable supplied with the product. Do NOT use a power cable designed for, or supplied with, a different product.
- Refer to the *Power connection* section for more information on how to identify the wires in your product's power cable, and where to connect them.
- See below for more information on implementation for some common power distribution scenarios:

Important:

• When planning and wiring, take into consideration other products in your system, some of which (e.g. sonar modules) may place large power demand peaks on the vessel's electrical system, which may impact the voltage available to other products during the peaks.

• The information provided below is for guidance only, to help protect your product. It covers common vessel power arrangements, but does NOT cover every scenario. If you are unsure how to provide the correct level of protection, please consult an authorized dealer or a suitably qualified professional marine electrician.

Implementation — connection to distribution panel (Recommended)

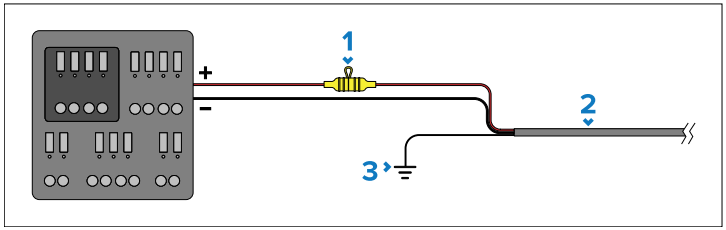

	Description
1	Waterproof fuse holder containing a suitably-rated inline fuse must be fitted. For suitable fuse rating, refer to: *Inline fuse and thermal breaker ratings*.
2	Product power cable.
3	Drain wire connection point.

- It is recommended that the supplied power cable is connected to a suitable breaker or switch on the vessel's distribution panel or factory-fitted power distribution point.
- The distribution point should be fed from the vessel's primary power source by 8 AWG (8.36 mm²) cable.
- Ideally, all equipment should be wired to individual suitably-rated thermal breakers or fuses, with appropriate circuit protection. Where this is not possible and more than 1 item of equipment shares a breaker, use individual inline fuses for each power circuit to provide the necessary protection.
- The power cable supplied with your product includes a drain wire, which must be connected to the vessel's common RF ground.

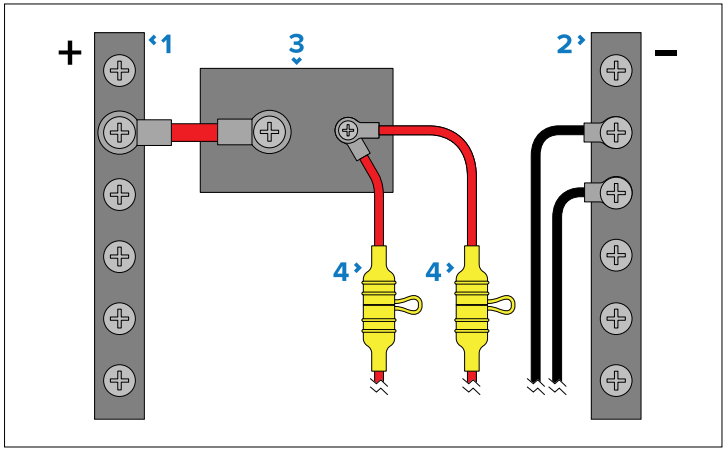

	Description
1	Positive (+) bar
2	Negative (-) bar

	Description
3	Circuit breaker
4	Waterproof fuse holder containing a suitably-rated inline fuse must be fitted. For suitable fuse rating, refer to: *Inline fuse and thermal breaker ratings*.

Important:
Observe the recommended fuse / breaker ratings provided in the product's documentation, however be aware that the suitable fuse / breaker rating is dependent on the number of devices being connected.

Implementation — direct connection to battery

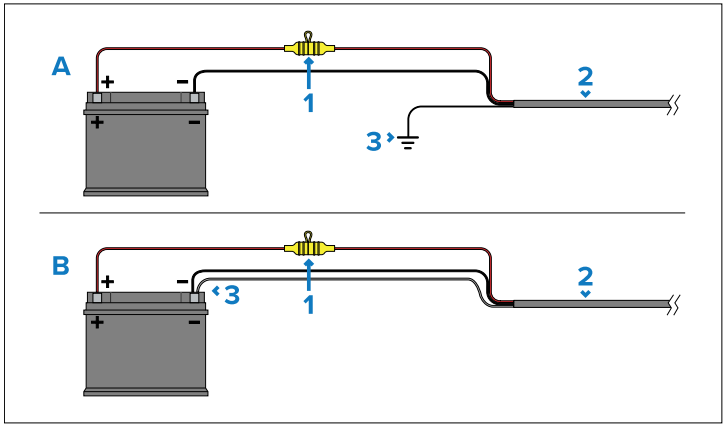

- Where connection to a power distribution panel is not possible, the power cable supplied with your product may be connected directly to the vessel's battery, via a suitably rated fuse or breaker.
- If the power cable is NOT supplied with a fitted inline fuse, you MUST fit a suitably rated fuse or breaker between the red wire and the battery's positive terminal.
- Refer to the inline fuse ratings provided in the product's documentation.
- If you need to extend the length of the power cable supplied with your product, ensure you observe the dedicated *Power cable extensions* advice provided in the product's documentation.

	Description
1	Waterproof fuse holder containing a suitably-rated inline fuse must be fitted. For suitable fuse rating, refer to: *Inline fuse and thermal breaker ratings*.
2	Product power cable.
3	Drain wire connection point.

Battery connection scenario A:
Suitable for a vessel with a common RF ground point. In this scenario, the power cable's drain wire should be connected to the vessel's common ground point.
Battery connection scenario B:
Suitable for a vessel without a common grounding point. In this case, the power cable's drain wire should be connected directly to the battery's negative terminal.

Grounding

Ensure that you observe any additional grounding advice provided in the product's documentation.

More information

It is recommended that best practice is observed in all vessel electrical installations, as detailed in the following standards:

- BMEA Code of Practice for Electrical and Electronic Installations in Boats
- NMEA 0400 Installation Standard
- ISO 13297: Small craft — Electrical systems — Alternating and direct current installations
- ISO 10133: Small craft — Electrical systems — Extra-low-voltage d.c. installations
- ABYC E-11 AC & DC Electrical Systems on Boats
- ABYC A-31 Battery chargers and Inverters
- ABYC TE-4 Lightning Protection

Warning: Product grounding

Before applying power to this product, it MUST be correctly grounded, in accordance with the instructions provided.

Warning: Positive ground systems

Do NOT connect this unit to a system which has positive grounding.

10.3 Grounding — optional grounding point

Frequencies emitted from equipment such as switch mode power supplies or MF/HF transmitters can cause interference with your display's touchscreen. If you experience issues with touchscreen performance, fitting an additional dedicated ground connection can resolve the issue.

Important:
The ground point should ONLY be connected when touchscreen interference is observed.

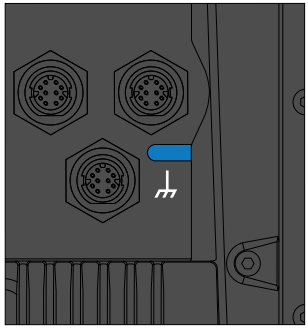

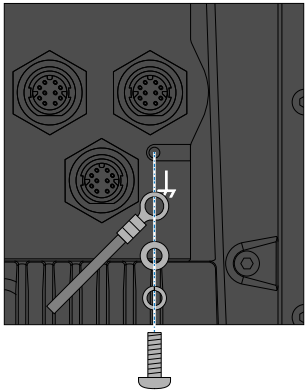

If using this optional ground connection, a single common ground point should be used for all equipment in your system.

To fit the grounding wire to the display, use a small flat blade screwdriver to remove the cover over the grounding screw hole.

Connect one end of the ground wire (not supplied) to your display using the supplied crimp, washer and screw.

Connect the other end of the ground wire to either the vessel's RF ground point, or on vessels without an RF ground system, the negative battery terminal.

The dc power system should be either:

- Negative grounded, with the negative battery terminal connected to the vessel's ground; or
- Floating, with neither battery terminal connected to the vessel's ground.

If several items require grounding, they may first be connected to a single local point (e.g. within a switch panel), with this point connected via a single, appropriately-rated conductor, to the vessel's common RF ground point.

Implementation

The preferred minimum requirement for the path to ground is via a flat tinned copper braid, with a 30 A rating (1/4 inch) or greater. If this is not possible, an equivalent stranded wire conductor may be used, rated as follows:

- For runs of <1 m (3 ft), use 6 mm^2 (#10 AWG) or greater.
- For runs of >1 m (3 ft), use 8 mm^2 (#8 AWG) or greater.

In any grounding system, always keep the length of connecting braid or wires as short as possible.

References

- ISO10133/13297
- BMEA code of practice
- NMEA 0400

CHAPTER 11: NETWORK CONNECTIONS

CHAPTER CONTENTS

- 11.1 Networking constraints — page 52
- 11.2 NMEA 2000 / SeaTalk NG connection — page 53
- 11.3 NMEA 0183 connection — page 53
- 11.4 Network connection — page 54
- 11.5 Power over Ethernet (PoE) — page 55
- 11.6 Internet connection — page 56

11.1 Networking constraints

In systems that include more than one chartplotter, the chartplotters must be networked together using an Ethernet network. The Ethernet network can be either a direct RayNet cable connection or connection via a network switch, such as the RNS-5. The following constraints apply when networking chartplotters:

Ethernet networks

- Any network including more than one chartplotter must have a designated **Datamaster**.
- The Datamaster chartplotter is the primary display in the system and will receive data from NMEA 2000 / SeaTalk NG and, if applicable, NMEA 0183 devices. The data received by the Datamaster will be bridged over the Ethernet network to other networked chartplotters.
- Up to 10 chartplotters can be connected to the same network.
- All networked chartplotters should have the same software version.
- In mixed Axiom-Series and Axiom 2-Series display networks, an Axiom 2-Series display must be the Datamaster.
- The data from other compatible Ethernet devices connected directly to a chartplotter will be shared with other networked chartplotters.
- Networked chartplotters will share the Datamaster's Homescreen. Changes made to the Homescreen on any chartplotter on the network will be reflected on all networked chartplotters.
- Electronic cartography stored on internal or external memory on any chartplotter can be shared by all chartplotters on the same network.
- Up to 2 Radar scanners can be connected to the same network and used simultaneously.
- Multiple Sonar modules can be connected to the same network and used simultaneously.
- Chartplotters with an internal sonar module can share sonar data with networked chartplotters.

For details regarding internet connections, refer to:

- **p.56 — Internet connection**

For details regarding networking third-party Ethernet products, refer to:

- **p.119 — Ethernet (IPv4) networking of Raymarine devices with third-party products**

Wi-Fi networks

- Chartplotters cannot share data over a Wi-Fi connection.
- The chartplotter's Wi-Fi connection can be used to provide an internet connection to the chartplotter via an access point.
- Chartplotters that have an internet connection using Wi-Fi will share the internet connection with Ethernet networked chartplotters.
- An internet connection over Ethernet will take precedence over an internet connection over Wi-Fi.
- Data from ethernet networked devices is **not** bridged over a Wi-Fi connection.
- Data from NMEA 2000 / SeaTalk NG devices is **not** bridged over a Wi-Fi connection.

NMEA 2000 / SeaTalk NG networks

- Only the Datamaster chartplotter needs to be connected to the NMEA 2000 / SeaTalk NG backbone.
- If more than one chartplotter is connected to the backbone, only the Datamaster chartplotter will receive data from other devices on the backbone.
- The Datamaster chartplotter will bridge NMEA 2000 / SeaTalk NG data over the Wi-Fi network to other chartplotters.
- More than one chartplotter can be connected to the same backbone for data redundancy purposes. If the **Datamaster** chartplotter fails, another networked chartplotter can take its place as the Datamaster. All chartplotters on the same backbone should have the same software version.

Networking with legacy chartplotters

- Axiom 2 Pro chartplotters cannot be networked to legacy chartplotters running LightHouse 2.
- Axiom-Series chartplotters running earlier versions of LightHouse 3 can be networked to legacy chartplotters. For further details on networking legacy chartplotters, refer to:
  - **p.118 —** Legacy eS and gS Series compatibility with **Axiom** displays

- Alpha Performance displays cannot be networked to legacy displays running LightHouse 2.

11.2 NMEA 2000 / SeaTalk NG connection

The MFD/Chartplotter can be connected to a NMEA 2000 / SeaTalk NG network by connecting a spur cable to the NMEA 2000 (DeviceNet) connector located on the rear of the MFD/Chartplotter.

Note:
Only the **Datamaster** MFD/Chartplotter requires a connection to the NMEA 2000 / SeaTalk NG network. Other MFDs/Chartplotters can be connected for data redundancy; however only the **Datamaster** MFD/Chartplotter will receive data from NMEA 2000 / SeaTalk NG devices. The Datamaster MFD/Chartplotter can bridge the data over the ethernet network to other MFDs/Chartplotters in the system.

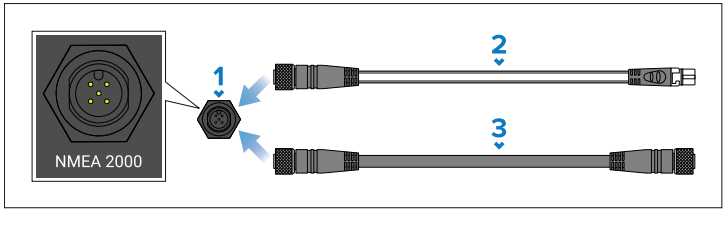

1. MFD/Chartplotter's NMEA 2000 (DeviceNet) connector.
2. Use the supplied DeviceNet to SeaTalk NG adaptor cable to connect to a SeaTalk NG network backbone.
3. Alternatively, you can connect to a NMEA 2000 backbone using a standard DeviceNet cable (not supplied).

Note:

1. NMEA 2000 / SeaTalk NG devices must be connected to a correctly terminated backbone.
2. NMEA 2000 / SeaTalk NG devices can NOT be connected directly to the MFD/Chartplotter.
3. Refer to the instructions supplied with your NMEA 2000 / SeaTalk NG device for details on creating a backbone.

Refer to **p.105 — Spares and accessories** for a list of available SeaTalk NG cables.

11.3 NMEA 0183 connection

The display can transmit and receive NMEA 0183 data when using a compatible NMEA 2000 to NMEA 0183 converter, such as the Actisense® NGW-1 converter (part number: A80721), connected to the same NMEA 2000 / SeaTalk NG network as the display.

Important:
Ensure all devices are powered off before making connections.

Connect the converter to your NMEA 2000 or SeaTalk NG network, using either a DeviceNet to SeaTalk NG adaptor cable, or a DeviceNet cable as appropriate. Then, connect the converter's NMEA 0183 bare wires to the relevant wires on your NMEA 0183 device, and crimp and insulate the wires.

Note:
The details below are provided as an example of how to connect a device using the Actisense® NGW-1 converter (A80721). Depending on your NMEA 0183 device, you may require a different converter. The converter and device wire colors may also vary from those shown. Refer to the instructions supplied with your NMEA 0183 device and your converter to identify correct signal connections.

Example NMEA 0183 version 2 / 3 device connection using the Actisense® NGW-1 converter

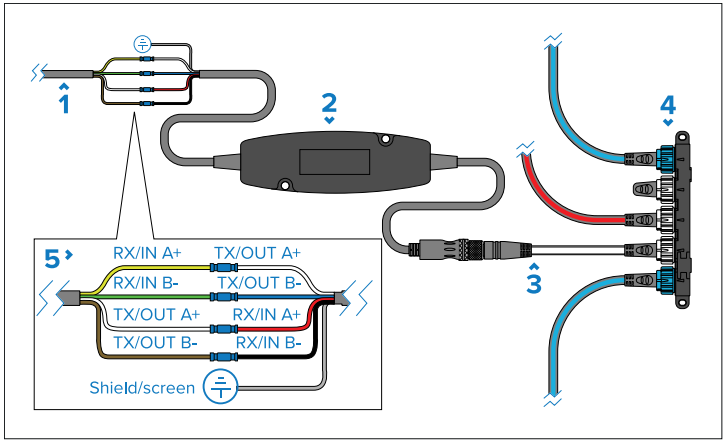

1. Device NMEA 0183 wires.
2. NMEA 2000 to NMEA 0183 converter (e.g. Actisense® NGW-1 converter, A80721).
3. SeaTalk NG (female) to DeviceNet (female) adaptor cable (e.g. A06045 or A06075).
4. SeaTalk NG network (requires dedicated 12 V dc power supply).
5. NMEA 0183 wire connections. It is recommended that wire connections are made using crimps and then insulated using insulation tape.

Example NMEA 0183 version 2 / 3 device connections

Converter signal (wire color)	NMEA 0183 device signal
TX/OUT A+ (White)	RX/IN A+
TX/OUT B- (Blue)	RX/IN B-
RX/IN A+ (Red)	TX/OUT A+
RX/IN B- (Black)	TX/OUT B-
Shield/Screen	Vessel Ground

If your NMEA 0183 device is a version 1 device (i.e.: it only has 3 NMEA 0183 wires), the connection will differ from that described above. Please see below for alternative wiring:

Example NMEA 0183 version 1 receiving device connections

Converter signal (wire color)	Receiving NMEA 0183 device signal
TX/OUT A+ (White)	RX/IN
TX/OUT B- (Blue)	NOT CONNECTED
Shield/Screen	Vessel Ground

Example NMEA 0183 version 1 transmitting device connections

Converter signal (wire color)	Transmitting NMEA 0183 device signal
RX/IN A+ (Red)	TX/OUT
RX/IN B- (Black)	Vessel Ground
Shield/Screen	Vessel Ground

11.4 Network connection

The display can be connected to compatible network products by connecting a network cable from the product to a **NETWORK** connector located on the rear of the display. Alternatively, the display can be connected to a network switch, e.g.: RNS-5, or the YachtSense Link marine router.

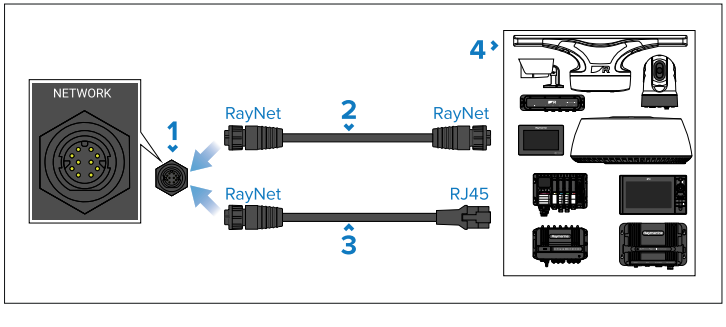

1. Display's **NETWORK** connector.

2. RayNet to RayNet cable — Connect one end of the RayNet cable to your display, and the opposite end to a RayNet device or RayNet network switch.
3. RayNet to RJ45 adapter cable — Connect the RayNet end of the cable to your display, and the opposite end to a network device with an RJ45 connector, or an RJ45 coupler.
4. Examples of compatible network devices with RayNet or RJ45 connectors (e.g.: Radar scanners, Sonar modules, Displays, Network switches, Cameras etc).

For a list of available network cables, refer to:

- **p.105 — Spares and accessories**

Cable suppression ferrites

To ensure optimum EMC performance and to comply with applicable EMC regulations all RayNet cables connected to this product must have a suppression ferrite fitted.

Three suppression ferrites are included with your product, one for each RayNet connection.

Fit a ferrite to each RayNet cable as shown below:

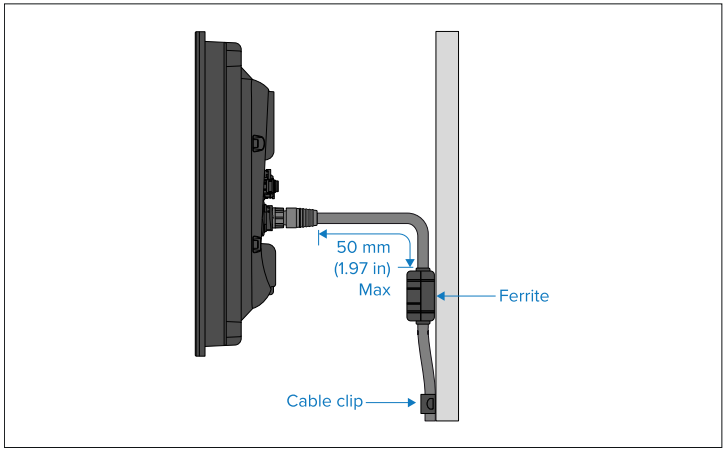

- Cable clips (not supplied) should be used to support the cable and ferrite.
- If you need to remove a ferrite for any reason, ensure it is replaced in its original location before using the product.
- If the ferrite moves freely once fitted, use cable ties (not supplied) above and below the ferrite to secure it in place.

11.5 Power over Ethernet (PoE)

Power over Ethernet (PoE) is a system which allows both power and data to be passed along a single Ethernet cable.

Your display is a PSE (Power Sourcing Equipment) which supplies power over the network connections to connected PoE Powered Devices (PD). The display can output a maximum of 32 Watts (26 W @ PD) for consumption by up to 3 PoE powered devices.

The following PoE device classes are supported:

PoE device class	PSE (Power Sourcing Equipment) — display	PD (Power required by device)
Class 1 (Very low power)	4 W	3.84 W
Class 2 (Low power)	7 W	6.49 W
Class 3 (Mid power)	15.4 W	12.95 W
Class 4 (High power)	30 W	25.5 W
Class 0 (Classification unimplemented)	15.4 W	12.95 W

When a device is connected to the display's network connection, it is first interrogated to establish whether the device is a PoE Powered Device and, if so, which class of device it is. The maximum power for that device class (shown in the PSE column above) is then assigned to that network connection and deducted from the remaining power output (e.g. class 2 device = 7 W allocated, with 25 W remaining).

If a PoE Powered Device is connected that will take the total assigned power over 32 W (26 W @ PD), the device will NOT be allocated PoE power.

Power over Ethernet (PoE) connections

The display can power PoE devices by connecting them using a network cable to one of the display's **NETWORK POE OUT** connectors, located on the rear of the display.

In the example below, the combined power requirements of the 3 PoE devices does not exceed the 32 watts the display has available. All 3 devices can therefore be powered by the display, via PoE.

Example PoE connections

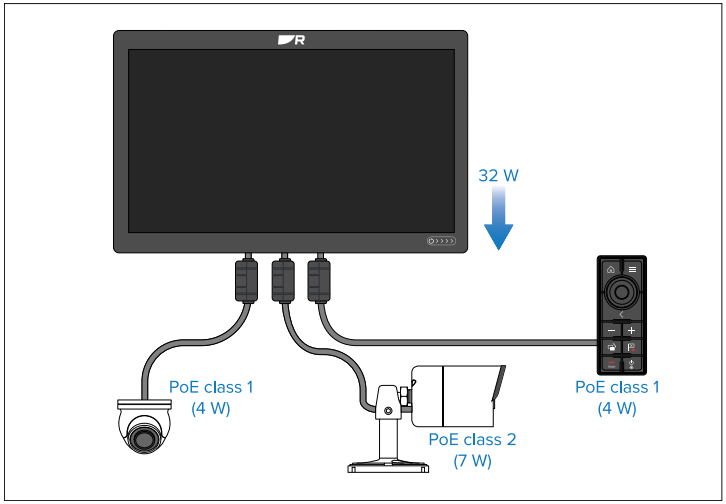

Note:

- The PoE devices should be connected using RayNet cables.
- The ferrites supplied with your display must be used on all RayNet network connections.
- In order to sufficiently power PoE devices, the display's power supply must exceed 9.5 V dc.

11.6 Internet connection

Some features require the display to have a connection to the internet.

Note:
In versions of the YachtSense Link router software *later than* **v4.20**, the display cannot connect to the router's Wi-Fi access point.

The display can be connected to the internet using the following methods:

- Connecting the display's Wi-Fi connection to a Wi-Fi access point which has an internet connection, such as marina Wi-Fi or mobile device. For connection details, refer to:
  - **p.57 — Connecting to the internet using Wi-Fi**
- Connecting the display's RayNet Ethernet connection to a YachtSense Link router which has internet access. Requires YachtSense Link router software **v4.20** or above.
- Connecting the display's Wi-Fi connection to a YachtSense Link router which has internet access. Requires YachtSense Link router software **v4.17** *or earlier*.
- Connecting the display's Wi-Fi or RayNet Ethernet connection to a third-party router which has internet access

Note:

- When connecting to a YachtSense Link router, follow the instructions provided with the router to set up an internet connection.
- When using a third-party router, follow the instructions provided with it to set up an internet connection and then follow the guidance in the appendix of this document to help you configure internet access:
  - **p.119 — IP Networking of Raymarine devices with Third-party products**

YachtSense Link network connection

For optimum internet performance, Raymarine chartplotters should be connected to the router via a wired RayNet Ethernet connection.

For YachtSense Link router software versions from **v4.20** onwards, it is no longer possible for a display to connect to the router's Wi-Fi Access Point.

Software version	Description
Earlier than **v4.20**	Display may be connected to the YachtSense Link router's Wi-Fi Access Point. However, functionality will be limited to providing an internet connection for third-party apps which require internet access.
v4.20 *or later*	Display cannot connect to the YachtSense Link router's Wi-Fi Access Point. **Note:** For YachtSense Link routers which previously had a Wi-Fi connection to a display and have since been upgraded to **v4.20** from an earlier software version, the display will receive an IP address conflict notification. To correct the conflict, select *[Forget network]* in the displayed notification popup.

Connecting to the internet using Wi-Fi

The display can be connected directly to an access point that has an internet connection.

From the Homescreen:

1. Select the *[Apps]* icon from the Homescreen.

   The app launcher is displayed.
2. Select the connection status button, located at the top right of the app launcher page.

   The Wi-Fi settings page is displayed and will scan for available networks.

Note:
If there is a YachtSense Link router connected to your system, selecting this button will display the router's web interface.

3. Select the relevant Wi-Fi access point.
4. Enter the password for the network and select *[Connect]*.

   Your display will now connect to the access point.
5. Select the *[Back]* triangle symbol or the *[Home]* circle symbol at the bottom of the screen.

Your display should now have an internet connection.

Wi-Fi settings (Axiom 2-Series displays)

Wi-Fi Access Point (AP) or hotspot connection settings.

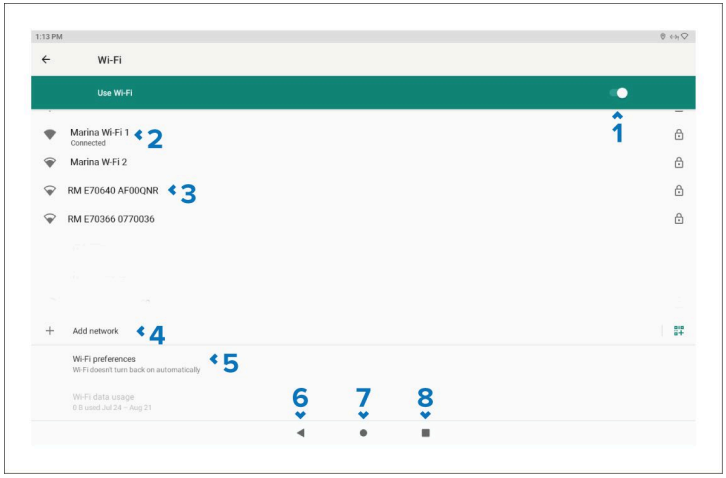

1. **Enable / Disable Wi-Fi**.
2. **Connected Access Point (AP)**.
3. **Available Access Points (AP)**.
4. **Add network** — Manually add a network.
5. **Wi-Fi preferences** — Provides Wi-Fi connection options.
6. **Back button** — Go back to the previous menu.
7. **Home button** — Go back to the previous menu.
8. **View open apps** — Go back to an open LightHouse apk app.

CHAPTER 12: VIDEO CONNECTIONS

CHAPTER CONTENTS

- 12.1 Axiom XL vs Axiom 2 XL video connections — page 59
- 12.2 Analog video (Video 2) connection — page 59
- 12.3 Analog video (Video 1) connection — page 60
- 12.4 HDMI IN connection — page 60
- 12.5 HDMI OUT connection — page 61

12.1 Axiom XL vs Axiom 2 XL video connections

When comparing Axiom XL to Axiom 2 XL displays, the primary and secondary video feeds are inverted.

On Axiom XL displays:

- The **primary** video feed *[VIDEO 1]* is streamed over Ethernet, and the connections for it are on the Alarm / Video cable.
- The **secondary** video feed *[VIDEO 2]* is NOT streamed over Ethernet, is shared with the *[HDMI IN]* connection, and the connections for it are on the Power / Data / Video cable.

On Axiom 2 XL displays:

- The **primary** video feed *[VIDEO 2]* is streamed over Ethernet, and the connections for it are on the Power / Data / Video cable.
- The **secondary** video feed *[VIDEO 1]* is NOT streamed over Ethernet, is shared with the *[HDMI IN]* connection, and the connections for it are on the Alarm / Video cable.

Note:

• When swapping out an older Axiom XL display with an Axiom 2 XL display, you will need to change your video cable connections if you had a video source connected to the Axiom XL display that was being streamed to other networked displays. Disconnect the video device connected to the Axiom XL's *[VIDEO 1]* connection (i.e. via the Alarm / Video cable), and connect this video device to the Axiom 2 XL's *[VIDEO 2]* connection (i.e. via the Power / Data / Audio cable).

• The original Axiom XL Power / Video / NMEA 0183 cables cannot be used with Axiom 2 XL displays.

12.2 Analog video (Video 2) connection

Analog video feeds from sources such as a Thermal camera or Security camera can be connected to your display by connecting the device to the BNC connector included on the display's Power / Video / Audio cable. The video feed can be viewed using the Video app.

Note:

• *[VIDEO 2]* is the primary video connection.

• The Video feed connected to *[VIDEO 2]* is encoded as RTSP and streamed over Ethernet to networked displays.

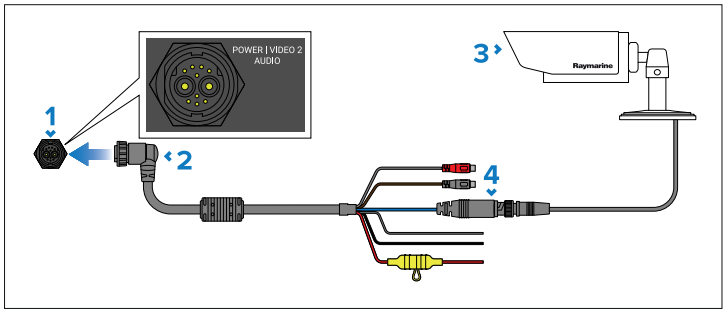

1. Display's **POWER | VIDEO 2 | AUDIO** connector.
2. Power / Video / Audio cable supplied with your display.
3. Analog video device.
4. *[VIDEO 2]* — Analog video BNC connector.

Note:

• Axiom 2 XL displays are supplied with a Power / Video / Audio cable that has a right-angled connector. A straight connector cable is also available (A80744).

• The original Axiom XL Power / Video / NMEA 0183 cables cannot be used with Axiom 2 XL displays.

For installation details, refer to the documentation provided with your analog video device.

12.3 Analog video (Video 1) connection

Analog video feeds from sources such as a Thermal camera or Security camera can be connected to your display by connecting the device to the BNC connector on the Video in/Alarm out cable accessory (part number: A80235). which is connected to the **ALARM | VIDEO 1** connector located on the rear of the display. The video feed can be viewed using the Video app.

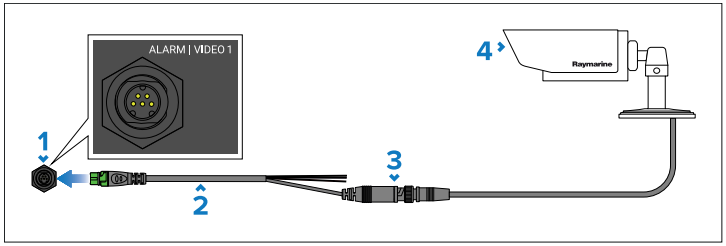

1. Display's **ALARM | VIDEO 1** connector.
2. Video in/Alarm out cable (part number: A80235) — not supplied.
3. (Video 1) Analog video BNC connector.
4. Analog video device.

For installation details, refer to the documentation provided with your analog video device.

Note:

• **VIDEO 1** is the secondary video connection and is shared with **HDMI IN**. **HDMI IN** and **VIDEO 1** cannot be used at the same time. If devices are connected to both connections then the **HDMI IN** connection will take priority.

• The video feeds connected to **HDMI IN** and **VIDEO 1** are NOT streamed over ethernet to networked displays.

12.4 HDMI IN connection

You can view HDMI input feeds from a third party device such as a Blu-Ray player or personal computer using the Video app.

Your display can be connected via the separately available *HDMI cable accessory* (part number: A80219). This cable connects to the **HDMI IN** connector located on the rear of the display, and to the HDMI Out connector on the third party device. The third party device's screen can then be viewed in the Video app by selecting the HDMI video feed from the Settings menu.

The supported screen resolutions for the display's HDMI input are:

- 640 x 480p @ 60 Hz
- 720 x 480p @ 60 Hz
- 720 x 576p @ 50 Hz
- 1280 x 720p @ 50 Hz / 60 Hz
- 1920 x 1080p @ 50 Hz / 60 Hz

Note:

• The maximum supported HDMI cable length is 20 m (65.6 ft). If longer cable runs are needed, an HDMI extender (signal amplifier) is also required, available separately from suitable retailers.

• Ensure that the HDMI cable's locking collar is used to secure the cable to the display.

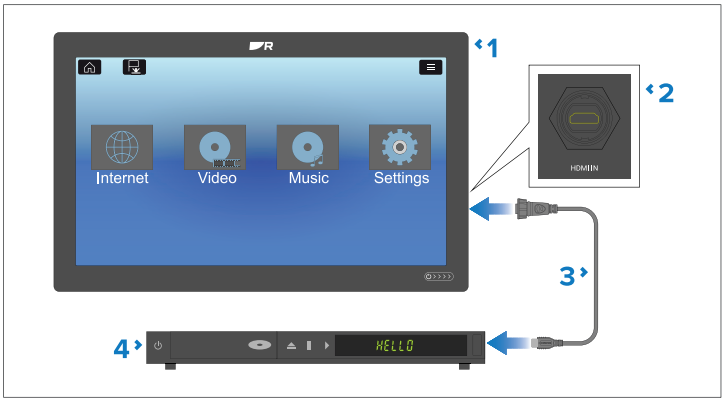

1. Display.

2. Display's **HDMI IN** connector.
3. HDMI cable (part number: A80219) — Not supplied.
4. Video playback device (e.g.: Blu-ray player).

Note:

• **HDMI IN** is the secondary video connection and is shared with **VIDEO 1**. **HDMI IN** and **VIDEO 1** cannot be used at the same time. If devices are connected to both connections then the **HDMI IN** connection will take priority.

• The video feeds connected to **HDMI IN** and **VIDEO 1** are NOT streamed over ethernet to networked displays.

Audio

To listen to the video feed's audio track you require an audio output device this can be:

- Sound system connected to the audio connection on the display's Power/Video/Audio cable.
- A Bluetooth speaker paired with the display.
- Speaker or sound system connected directly to your video playback device.
- Sound system connected to the display's HDMI out connection.

STV connection

You can connect Satellite TV equipment such as an STV37 to the *[HDMI IN]* connector.

Note:
A 3rd party Satellite receiver with a HDMI out connection is required.

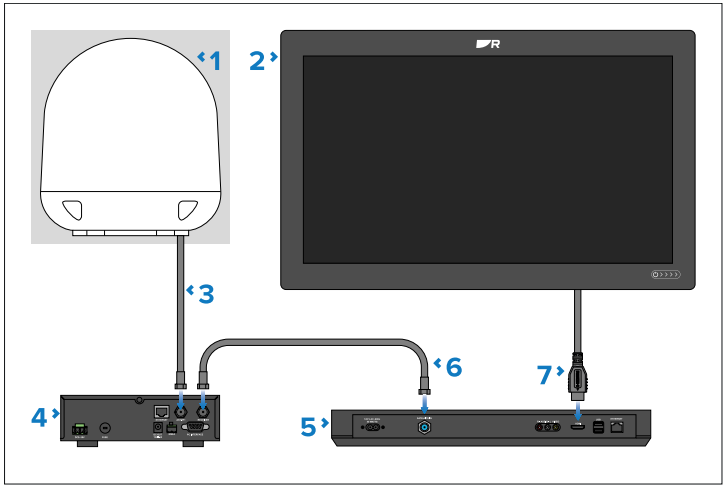

1. Satellite TV antenna.
2. Axiom® 2 XL display.
3. RF cable (Connection between antenna and Antenna Control Unit (ACU).
4. Antenna Control Unit (ACU).
5. 3rd party satellite receiver.
6. RF cable (Connection between ACU and receiver).
7. HDMI cable (Connection between receiver and Axiom® 2 XL display).

12.5 HDMI OUT connection

You can view the Raymarine® display's screen and output its audio to an external third-party High Definition (HD) display, such as an HD TV or computer monitor.

Your Raymarine® display can be connected via the separately available *HDMI cable accessory* (part number: A80219). This cable connects to the **HDMI Out** connector located on the rear of the Raymarine® display, and to an available HDMI connector on the third-party display. The Raymarine® display screen can then be viewed by switching the third-party display's *input source* to the HDMI connection that you connected your Raymarine® display to.

Alternatively, you can connect the Raymarine® display's HDMI out connection to a sound system that has an HDMI input connection. Depending on the connected device, this may support audio only.

The supported screen resolutions for the Raymarine® display's HDMI output are:

- 720 x 480p @ 60 Hz
- 720 x 576p @ 50 Hz
- 1280 x 720p @ 50 Hz / 60 Hz
- 1920 x 1080p @ 50 Hz / 60 Hz

Note:

• The maximum supported HDMI cable length is 20 m (65.6 ft). If longer cable runs are needed, an HDMI extender (signal amplifier) is also required, available separately from suitable retailers.

• Ensure that the HDMI cable's locking collar is used to secure the cable to the Raymarine® display.

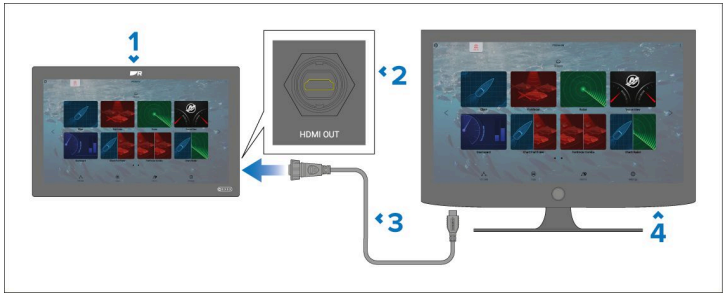

1. Raymarine® Display.
2. Raymarine® Display's **HDMI Out** connector.
3. HDMI cable (part number: A80219) — Not supplied.
4. Third-party display.

CHAPTER 13: USB CONNECTIONS

CHAPTER CONTENTS

- 13.1 Touch control input connection — page 64
- 13.2 Touch control out connection — page 64
- 13.3 Accessory connection — page 65

13.1 Touch control input connection

You can view and control the display from a connected high definition touchscreen monitor by connecting the monitor to the **HDMI OUT** and **TOUCH CONTROL IN** connectors located on the rear of the display using the .HDMI cable accessory (part number: A80219) and the USB A to USB B cable accessory (part number: A80578). The display screen can then be viewed by switching the monitor's source to the HDMI connection you connected the cable to and controlled by using the monitor's touchscreen.

The standard HDMI connector and standard USB connector on the accessory cables are connected to the monitor and the other end of the cables are connected **HDMI OUT** and **TOUCH CONTROL IN** connectors.

Note:
Ensure that the locking collars are used to secure the connections to the display.

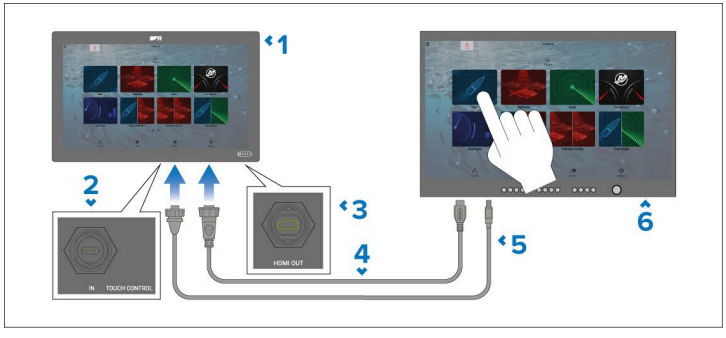

1. Display.
2. Display's **TOUCH CONTROL IN** connector.
3. Display's **HDMI OUT** connector.
4. HDMI cable (part number: A80219) — Not supplied.
5. USB A to USB B cable (part number: A80578) — Not supplied.
6. HD touchscreen display.

13.2 Touch control out connection

You can view and control a personal computer or similar device from the display by connecting the device to the **HDMI IN** and **TOUCH CONTROL OUT** connectors located on the rear of the display using the .HDMI cable accessory (part number: A80219) and the USB B to USB A cable accessory (part number: A80579). The device can then be viewed and controlled from the display using Video app and the display's touchscreen.

The standard HDMI connector and standard USB connector on the accessory cables are connected to the monitor and the other end of the cables are connected **HDMI IN** and **TOUCH CONTROL OUT** connectors.

Note:
Ensure that the locking collars are used to secure the connections to the display.

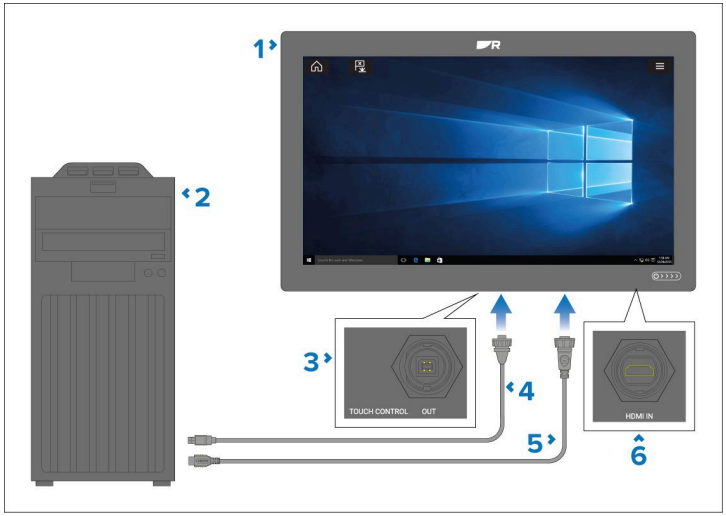

1. Display.
2. Personal computer.
3. Display's **TOUCH CONTROL OUT** connector.
4. USB B to USB A cable (part number: A80579) — Not supplied.

5. HDMI cable (part number: A80219) — Not supplied.
6. Display's **HDMI IN** connector.

Note:

• The **HDMI IN** and **VIDEO 1** connections share internal hardware and cannot be used at the same time. If devices are connected to both connections then the **HDMI IN** connection will take priority.

• The video feed connected to the **HDMI IN** and **VIDEO 1** connections are NOT streamed on the ethernet network to other displays..

13.3 Accessory connection

The **ACCESSORY** connector can be used to connect an external memory card reader or external storage device to the display.

The following functions require a card reader attached to the display:

- use of electronic cartography — alternatively cartography can be shared from a networked display that does have a card reader attached.
- updating product software — alternatively if your display has a connection to the internet you can check online for software updates.
- import and export user data (waypoints, routes and tracks) — alternatively user data can be imported and exported from a networked display that does have a card reader attached.
- backup and restore settings — alternatively settings can be backed up and restored from a networked display that does have a card reader attached.
- viewing pdf files
- (1) capturing and viewing screenshots or images (.png, .jpg files)
- (2) recording and viewing video files (.mov files)
- installation of third-party LightHouse app (.apk files) (for installation only; apps cannot be run directly from storage device).

In addition to the storage uses listed above, the USB slot on the RCR-SDUSB can also supply 0.5A of current to charge mobile devices.

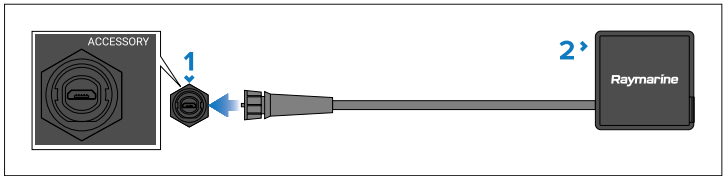

1. Display's **ACCESSORY** connector.
2. Accessory device:
   - **RCR-SDUSB** (part number: A80440) — Includes 1x SD card slot (or MicroSD card when using an SD card adaptor) and 1x USB (Type A connector) (e.g. for connection of an external USB hard drive or pen / flash drive).
   - **RCR-1** (part number A80585) — Includes 1x MicroSD card slot.
   - **Bulkhead Mount Micro-USB Socket** (part number: A80630) — Includes 1x Micro-USB (Type Micro A connector) (e.g. for connection of an external USB hard drive or pen / flash drive; an additional adaptor may be required for the connection of some USB devices).

- To store images (.png, .jpg files), *[External SD]* or *[External USB]* must be selected as the *[Screenshot File]* location on the *[This display]* tab in the main display settings menu (accessible from Homescreen).
- To store video (.mov files), *[External SD]* or *[External USB]* must be selected as the *[Save Files]* location on the *[Photo & Video recording]* tab in the Video app settings menu.

For installation details for these devices, please refer to the instructions provided with your accessory.

Fitting suppression ferrites

In certain installation scenarios interference may be experienced in the form of data corruption when reading and writing to external storage via the card reader. Under these circumstances the supplied suppression ferrites should be fitted to the card reader's cable, as described below.

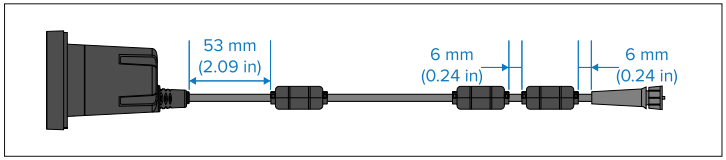

Two of the suppression ferrites should be fitted at 6 mm (0.24 in) intervals from the connector end of the cable and the third ferrite at a distance of 53 mm (2.09 in) from the rear of the card reader. Cable ties are also supplied to help secure each ferrite in place.

Warning: USB device power

Do NOT connect any device to the product's USB connection that requires an external power source.

CHAPTER 14: AUDIO CONNECTIONS

CHAPTER CONTENTS

- 14.1 Audio (RCA) connections — page 68

14.1 Audio (RCA) connections

The display can output audio received from an entertainment device connected to the **HDMI IN** connection, or from an installed third-party APK app (such as Netflix®), by connecting the **RCA AUDIO** connectors on the display's Power/audio/video cable to an audio input on an amplifier or entertainment system.

Note:
Audio output requires an external amplifier or entertainment system.

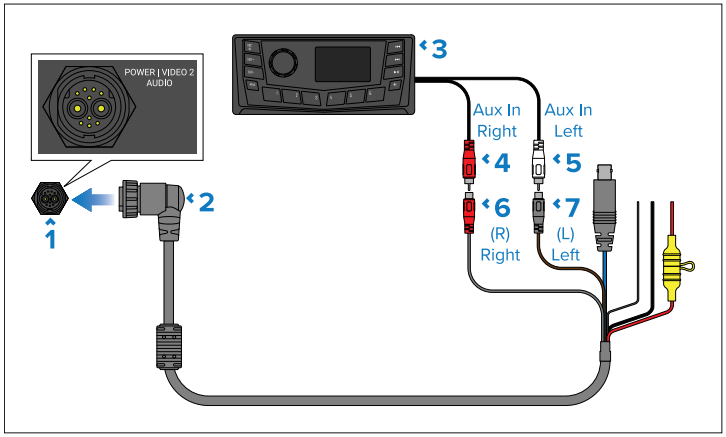

1. **POWER | VIDEO 2 | AUDIO** connector.
2. Display's Power/video/audio cable, 1.5 m (4.9 ft).
3. Entertainment system with built-in amplifier.
4. Entertainment system's Right auxiliary analog audio input (RCA; usually red male connector).
5. Entertainment system's Left auxiliary analog audio input (RCA; usually white or black male connector).
6. Display's Right channel analog audio output (red female RCA connector).
7. Display's Left channel analog audio output (black female RCA connector).

Note:
Optionally, digital audio may be output from the display wirelessly, by connecting a Bluetooth speaker. For instructions on pairing a Bluetooth speaker, refer to the operations instructions for your display (Document number: 81406).
A Bluetooth speaker will take priority over RCA audio and HDMI out (i.e.: if all are connected, audio will only be output from the Bluetooth speaker; if only RCA and HDMI out are connected, the audio will play from both. In this scenario, to output from RCA audio / HDMI out instead, switch the Bluetooth speaker off).

Note:

- Axiom® 2 XL displays are supplied with a Power/video/audio cable that has a right-angled connector. A straight connector cable is also available (A80744).
- The original Axiom® Power/Video/NMEA 0183 cables cannot be used with Axiom® 2 XL displays.

CHAPTER 15: ALARM BUZZER AND GNSS ANTENNA CONNECTIONS

CHAPTER CONTENTS

- 15.1 External alarm connection — page 70
- 15.2 GNSS (GPS) antenna connection — page 70

15.1 External alarm connection

An external alarm can be connected to the **ALARM | VIDEO 1** connector located on the rear of the display, using the Video In/Alarm out cable accessory (part number: A80235). The alarm buzzer sounds an audible alert tone when an alarm is triggered on the display.

Note:

- To ensure a secure connection to the display, twist the locking collar on the **ALARM | VIDEO 1** connector so that it is in the locked position.
- The alarm to cable connection should be made using suitable connectors (e.g. crimps), and then covered in insulation tape or similar to ensure the connection is secure and watertight.

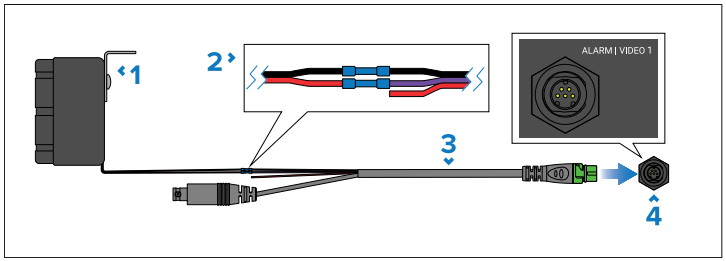

1. External alarm buzzer (part number: E26033) — Not supplied.
2. Connection — Wires must be connected **Black** to **Black** and **Red** to **Purple**.
3. Video in/Alarm out cable (part number: A80235) — Not supplied.
4. Display's **ALARM | VIDEO 1** connector.

15.2 GNSS (GPS) antenna connection

A passive GNSS antenna is required to obtain a position fix using the display's built-in GNSS (GPS) receiver. The antenna is connected to the **GPS ANTENNA** connector located on the rear of the display.

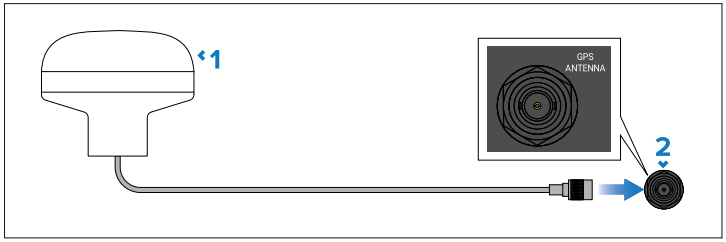

1. Passive GNSS (GPS) antenna:
   - **GA200** (part number: A80589), or
   - **GA150** (part number: A80288)
2. Display's **GPS Antenna** connector.

For installation details, refer to the documentation provided with your GNSS (GPS) antenna.

CHAPTER 16: MAINTAINING YOUR DISPLAY

CHAPTER CONTENTS

- 16.1 Service and maintenance — page 72
- 16.2 Product cleaning — page 72
- 16.3 Sun cover use and maintenance — page 72

16.1 Service and maintenance

This product contains no user serviceable components. Please refer all maintenance and repair to authorized Raymarine dealers. Unauthorized repair may affect your warranty.

Warning: High voltage

This product contains high voltage. Do NOT remove covers or attempt to access internal components, unless specifically instructed in the documentation provided.

Warning: FCC Warning (Part 15.21)

Changes or modifications to this equipment not expressly approved in writing by Raymarine UK Ltd could violate compliance with FCC rules and void the user's authority to operate the equipment.

Routine equipment checks

It is recommended that you perform the following routine checks, on a regular basis, to ensure the correct and reliable operation of your equipment:

- Examine all cables for signs of damage or wear and tear.
- Check that all cables are securely connected.

16.2 Product cleaning

Best cleaning practices.

When cleaning products:

- Switch off power supply.
- Use a clean damp cloth to wipe clean.
- Do NOT use: abrasive, acidic, ammonia, solvent or other chemical-based cleaning products.
- Do NOT use a jet wash.

Cleaning the display case

The display is a sealed unit and does not require regular cleaning. If it is necessary to clean the display, follow this basic procedure:

1. Switch off the power to the display.
2. Wipe the case with a clean, lint-free cloth.
3. If necessary, use a mild detergent to remove grease marks.

Cleaning the display screen

A coating is applied to the display screen. This makes it water repellent, and prevents glare. To avoid damaging this coating, follow this procedure:

1. Switch off the power to the display.
2. Rinse the screen with fresh water to remove all dirt particles and salt deposits.
3. Allow the screen to dry naturally.
4. If any smears remain, very gently wipe the screen with a clean microfibre cleaning cloth.

16.3 Sun cover use and maintenance

Sun covers for your display are available to purchase separately.

This section provides important information related to the use and maintenance of sun covers.

Caution: Sun covers

- Sun covers are used to protect the display screen against the damaging effects of ultraviolet (UV) light. If your product is supplied with a sun cover always ensure it is fitted when the product is not in use.
- To avoid potential loss of the sun cover, ensure that the sun cover is removed when travelling at high speed, whether in the water or when the vessel is being towed.
- To avoid potential screen damage, ensure that the rear surface of the sun cover and the display screen are clean and free from debris before placing the sun cover on the screen.

Warning: Sun cover contains magnets

The display's sun cover contains magnets which may interfere with magnetic sensitive devices (such as compasses, attitude sensors and gyroscopes).

To prevent potential interference:

- The display must be installed a safe distance away from magnetic sensitive devices.
- When the display is in use the sun cover must be stored away from such devices.

Cleaning the sun cover

If your display has a sun cover it should be cleaned regularly.

Follow the procedure below to avoid causing damage to your display's screen:

1. Carefully remove the sun cover from the display.
2. Rinse both sides of the sun cover with fresh clean water to remove all dirt particles and salt deposits.
3. Allow the sun cover to dry naturally.

CHAPTER 17: TROUBLESHOOTING

CHAPTER CONTENTS

- 17.1 Troubleshooting — page 75
- 17.2 Miscellaneous troubleshooting — page 75
- 17.3 LED Diagnostics — page 76
- 17.4 Power up troubleshooting — page 76
- 17.5 GNSS (GPS) troubleshooting — page 78
- 17.6 Sonar troubleshooting — page 79
- 17.7 Wi-Fi troubleshooting — page 81
- 17.8 Touchscreen troubleshooting — page 84

17.1 Troubleshooting

The troubleshooting section provides possible causes and the corrective action required for common problems that are associated with the installation and operation of your product.

Before packing and shipping, all products are subjected to comprehensive testing and quality assurance programs. If you do experience problems with your product, this section will help you to diagnose and correct problems to restore normal operation.

If after referring to this section you are still having problems with your product, please refer to the *Technical support and servicing* section of this manual for useful links and contact details.

17.2 Miscellaneous troubleshooting

Miscellaneous problems and their possible causes and solutions are described here.

Product behaves erratically (frequent unexpected resets / system crashes, or other erratic behavior):

Possible causes	Possible solutions
Intermittent problem with power to the product.	• Check relevant fuses and breakers. • Check that the power supply cable is sound, and that all connections are tight and free from corrosion. • Check that the power source is of the correct voltage, and that sufficient current is being provided to the product.
Software mismatch on system (upgrade required):	Go to https://bit.ly/rym-software for the latest software downloads.
Corrupt data / other unknown issue:	Perform a factory reset — refer to the relevant *Installation Instructions* document. **Important:** This will result in the loss of any settings and user data stored on the product. Save any important data to a memory card before resetting.

17.3 LED Diagnostics

The display's "Power swipe" key is illuminated using LEDs. The LED color and flash sequence identifies the status of the display, along with any error codes.

LED indication	Status and required action
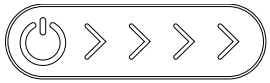	**(White): Powered up OK** Normal operation — no user action is required.
	(Red): Standby Swipe to power up display.
	(Blue): Recovery mode Follow the power on reset instructions: **p.77 — Performing a power on reset**
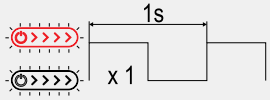	**(Red flash, 1 per second): Low voltage** • Increase supply voltage to within operating temperature range. • Check power cabling and connections for damage and corrosion; replace if required.
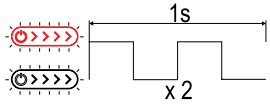	**(Red flash, 2 per second): High voltage** • Reduce supply voltage to within operating temperature range.
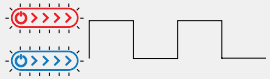	**(Red / Blue alternating flash): High temperature** • Check display installation for adequate ventilation and 'free' space around rear of display. • Check ambient temperature; if high, consider powering down the display until ambient temperature reduces.

17.4 Power up troubleshooting

Troubleshooting assistance with typical causes of power-related issues, and their solutions.

Product does not power up, or keeps switching off

Possible causes	Possible solutions
Blown fuse / tripped breaker:	1. Check condition of relevant fuses and breakers and connections, replace if necessary. (Refer to the *Power Connections* section of your product's Installation Instructions for fuse ratings.) 2. If fuse keeps blowing, check for cable damage, broken connector pins, or incorrect wiring.
Poor / damaged / insecure power supply cable / connections:	1. Check that the power cable connector is correctly orientated and fully inserted into the product's *Power* connector, and locked in position. 2. Check the power supply cable and connectors for signs of damage or corrosion, and replace if necessary. 3. With the product switched on, try carefully flexing the power cable near to the product's *Power* connector to see if this causes the unit to restart or lose power. Replace if necessary. 4. Check the vessel's battery voltage and the condition of the battery terminals and power supply cables, ensuring connections are secure, clean and free from corrosion. Replace if necessary. 5. With the product under load, using a multi-meter, check for high voltage drop across all connectors / fuses etc, and replace if necessary.
Incorrect power connection:	The vessel's power supply may be wired incorrectly. Ensure that the product's *Installation Instructions* have been followed completely.

Product will not start up (restart loop)

Possible causes	Possible solutions
Power supply and connection:	See possible solutions from the table above, entitled '*Product does not power up, or keeps switching off*'.
Software corruption:	1. In the unlikely event that the product's software has become corrupted, try downloading and installing the latest software from: www.bit.ly/rym-software 2. If your product includes a display: as a last resort, attempt to perform a 'Power on Reset'. Be aware that this will delete all settings / presets and user data, and revert the unit back to factory default settings.

Performing a power on reset on touch-only displays

Important:

• Before performing a power on reset, ensure you have backed up your settings and user data (waypoints, routes and tracks) to a memory card.

• You may also want to save any crash logs that are stored on your display to a memory card, for future reference.

1. Switch off power at the breaker to ensure that the display is completely powered off, and not in Standby mode. Alternatively, remove the power cable from the display.
2. Power on your display, and within approximately 10 seconds, swipe your finger from right to left **5 times** across the *[Power]* button swipe area (i.e. the opposite direction to powering on).

   Recovery options are displayed.
3. Swipe your finger from right to left **twice** to highlight the *[Wipe data / factory reset]* option.
4. Swipe your finger from left to right **once** to accept the Disclaimer.
5. Swipe your finger from right to left **once** to highlight *[Yes]*.
6. Swipe your finger from left to right **once** to restore your display to factory default settings.

7. When *[Data wipe complete]* is displayed, swipe your finger from left to right to restart your display.

Saving crash logs

If you experience problems with your display it is recommended that you save display crash logs to memory card for future reference.

When contacting technical support, you may be requested to save crash logs, for sending to the support team. It is recommended that you save crash logs before performing a reset of your display.

1. Insert a memory card into your card reader.
2. Select *[Settings]* from the Homescreen.
3. Select the *[Network]* tab.
4. Select *[Diagnostics]*.
5. Select *[Save logs (#)]* to save logs from the current display, or
6. Select *[Save crash logs from all displays]* to save logs from all displays on the network.
7. Select *[OK]*.

17.5 GNSS (GPS) troubleshooting

Problems with the GNSS (GPS) and their possible causes and solutions are described here. Your position fix coordinates are displayed in the status area located in the top left corner of the Homescreen.

Note:
Your product includes an internal GNSS (GPS) receiver that requires an external antenna (such as the GA150) to operate correctly.

No position fix

Possible causes	Possible solutions
No external GNSS (GPS) antenna connected.	When using your product's internal GNSS (GPS) receiver, an external antenna such as the GA150 must be connected to enable a position fix to be obtained.
Internal GNSS (GPS) receiver disabled.	When using your product's internal GNSS (GPS) receiver, ensure that it is enabled in the relevant settings menu. To access the relevant menu, select the status area located in the top left corner of the Homescreen, and select *[Satellites]*. Then select the *[Settings]* tab, locate the Internal GPS option, and ensure that it is enabled.
External GNSS (GPS) antenna connection fault.	When using your product's internal GNSS (GPS) receiver, ensure that the connection to its external antenna is secure, and that the cabling is free from damage.
External GNSS (GPS) receiver connection fault.	When using an external GNSS (GPS) receiver, ensure that connections are secure and that the cabling is free from damage.
External GNSS (GPS) receiver or antenna location (e.g.: installed below decks or in close proximity to equipment which may cause interference).	Ensure the GNSS (GPS) receiver or antenna has a clear unobstructed view of the sky. Refer to the documentation supplied with your external receiver / antenna and ensure location requirements have been adhered to.
Geographic location or prevailing conditions preventing satellite fix.	Check periodically to see if a fix is obtained in better conditions or another geographic location.

17.6 Sonar troubleshooting

Problems that can be encountered with your sonar module and possible causes and solutions are described here.

Note:
This troubleshooting guide assumes that you have a compatible transducer connected to either your chartplotter directly (for Sonar-variant displays only), or an external sonar module, which is correctly networked to your chartplotter.

Scrolling image is not being displayed:

Possible causes	Possible solutions
Sonar disabled	Select *[Ping Enable]* from the Sonar app's Sounder menu.
Incorrect transducer selected	Check that the correct transducer is selected in the Sonar app's Transducer menu.
Damaged cables	1. Check that the transducer cable connector is fully inserted and locked in position. 2. Check the power supply cable and connectors for signs of damage or corrosion, replace if necessary. 3. With the unit turned on, try flexing the cable near to the display connector to see if this causes the unit to restart or lose power. Replace if necessary. 4. Check the vessel's battery voltage, the condition of the battery terminals and power supply cables, ensuring connections are secure, clean and free from corrosion, replace if necessary. 5. With the product under load, using a multi-meter, check for high voltage drop across all connectors / fuses etc (this can cause the Sonar applications to stop scrolling or the unit to reset or switch off). Replace if necessary.
Damaged or fouled transducer	Check the condition of the transducer, ensuring that it is not damaged and is free from debris / fouling. Clean or replace as necessary.
Wrong transducer fitted	Ensure that he transducer is compatible with your system.
External sonar module: / RayNet network problem.	• Check that the unit is correctly connected to the multifunction display or Raymarine network switch. If a crossover coupler or other coupler cable / adapter is used, check all connections, ensuring that they are secure, clean, and free from corrosion. Replace if necessary.
External sonar module: Software mismatch between equipment may prevent communication.	Ensure that all Raymarine products contain the latest available software. Check the Raymarine website for software version information: https://bit.ly/rym-software

No depth reading / lost bottom lock:

Possible causes	Possible solutions
Transducer location	Check that the transducer has been installed in accordance with the instructions provided with the transducer.
Transducer angle	If the transducer angle is too great, the beam can miss the bottom. Adjust the transducer angle and re-check.
Transducer kicked-up	If the transducer has a kick-up mechanism, check that it has not kicked up due to hitting an object.

Possible causes	Possible solutions
Power source insufficient	With the product under load, using a multi-meter, check the power supply voltage as close to the unit as possible to establish actual voltage when the current is flowing. (Check your product's Technical specification for power supply requirements.)
Damaged or fouled transducer	Check the condition of the transducer, ensuring that it is not damaged and is free from debris / fouling.
Damaged cables	1. Check the unit's connector for broken or bent pins. 2. Check that the cable connector is fully inserted into the unit and that the locking collar is in the locked position. 3. Check the cable and connectors for signs of damage or corrosion. Replace if necessary. 4. With the unit switched on, try flexing the power cable near to the display connector to see if this causes the unit to restart or lose power. Replace if necessary. 5. Check the vessel's battery voltage, the condition of the battery terminals and power supply cables, ensuring that connections are secure, clean and free from corrosion. Replace if necessary. 6. With the product under load, using a multi-meter, check for high voltage drop across all connectors / fuses etc. (Voltage drops can cause the Sonar applications to stop scrolling or the unit to reset or switch off.) Replace if necessary.

Possible causes	Possible solutions
Vessel speed too high	Slow the vessel speed and re-check.
Bottom too shallow or too deep	The bottom depth may be outside of the transducer's depth range. Move vessel to shallower or deeper waters as relevant, and re-check.

Poor / problematic image

Possible causes	Possible solutions
Vessel stationary	Fish arches are not displayed if the vessel is stationary; fish will appear on the display as straight lines.
Scrolling paused or speed set too low	Unpause or increase sonar scrolling speed.
Sensitivity settings may be inappropriate for present conditions.	Check and adjust sensitivity settings or perform a Sonar reset.

Possible causes	Possible solutions
Damaged cables	1. Check the unit's connector for broken or bent pins. 2. Check that the cable connector is fully inserted into the unit and that the locking collar is in the locked position. 3. Check the cable and connectors for signs of damage or corrosion, replace if necessary. 4. With the unit switched on, try flexing the power cable near to the display connector to see if this causes the unit to restart or lose power. Replace if necessary. 5. Check the vessel's battery voltage, the condition of the battery terminals and power supply cables, ensuring that connections are secure, clean, and free from corrosion. Replace if necessary. 6. With the product under load, using a multi-meter, check for high voltage drop across all connectors / fuses etc. (Voltage drops can cause the Sonar applications to stop scrolling or the unit to reset or switch off.) Replace if necessary.
Transducer location	• Check that the transducer has been installed in accordance with the instructions provided with the transducer. • If a transom mount transducer is mounted too high on the transom it may be lifting out of the water, check that the transducer face is fully submerged when planing and turning.
Transducer kicked-up	If the transducer has a kick-up mechanism, check that it has not kicked up due to hitting an object.
Damaged or fouled transducer	Check the condition of the transducer, ensuring that it is not damaged and is free from debris / fouling.
Damaged transducer cable	Check that the transducer cable and connection is free from damage and that the connections are secure and free from corrosion.
Turbulence around the transducer at higher speeds may affect transducer performance	Slow the vessel speed and recheck.
Interference from another transducer	1. Switch off the transducer causing the interference. 2. Re-position the transducers so that they are further apart.
Unit power supply fault	Check the voltage from the power supply, if this is too low it can affect the unit's transmitting power.

17.7 Wi-Fi troubleshooting

Before troubleshooting problems with your Wi-Fi connection, ensure that you have followed the Wi-Fi location requirements guidance provided in the relevant *Installation Instructions*, and have also performed a power cycle / restart of the devices that you are experiencing problems with.

Cannot find network

Possible causes	Possible solutions
Wi-Fi not currently enabled on devices.	Ensure that Wi-Fi is enabled on both Wi-Fi devices, and then re-scan available networks.
Some devices may automatically turn off Wi-Fi when not in use to save power.	Power cycle / restart devices, and then re-scan available networks.

Possible causes	Possible solutions
Device not broadcasting.	1. Enable broadcasting of the device's network using the Wi-Fi settings on the device you are trying to connect to. 2. You may still be able to connect to the device even when it is not broadcasting, by manually entering the device's Wi-Fi Name / SSID and passphrase in the connection settings of the device you are trying to connect to.
Devices out of range or signal being blocked.	Move devices physically closer together or, if possible, remove the obstructions and then re-scan available networks.

Cannot connect to network

Possible causes	Possible solutions
Some devices may automatically turn off Wi-Fi when not in use to save power.	Power cycle / restart devices, and then retry the connection.
Trying to connect to the wrong Wi-Fi network	Ensure that you are trying to connect to the correct Wi-Fi network. The Wi-Fi network's name can be found in the Wi-Fi settings on the broadcasting device (the device that you are trying to connect to).
Incorrect network credentials	Ensure that you are using the correct passphrase. The Wi-Fi network's passphrase can be found in the Wi-Fi settings on the broadcasting device (the device that you are trying to connect to).

Possible causes	Possible solutions
Bulkheads, decks and other heavy structure can degrade and even block the Wi-Fi signal. Depending on the thickness and material used it may not always be possible to pass a Wi-Fi signal through certain structures	1. Try repositioning the devices so that structure is removed from the direct line of sight between the devices, or: 2. If possible, use a wired connection instead.
Interference being caused by other Wi-Fi enabled or older Bluetooth enabled devices (Bluetooth and Wi-Fi both operate in the 2.4 GHz frequency range, some older bluetooth devices may interfere with Wi-Fi signals.)	1. Change the Wi-Fi Channel of the device you are trying to connect to, and then retry the connection. You can use a free Wi-Fi analyzer app on your mobile or tablet device to help you choose a better channel (i.e. a channel with the least amount of traffic). 2. Temporarily disable each wireless device in turn until you have identified the device causing the interference.

Possible causes	Possible solutions
Interference caused by other devices that use the 2.4GHz frequency band. The following common devices use the 2.4GHz frequency band: • Microwave ovens • Fluorescent lighting • Cordless phones / baby monitors • Motion sensors	Temporarily switch off each device in turn until you have identified the device causing the interference, then remove or re-position the offending device(s).
Interference caused by electrical and electronic devices and associated cabling could generate an electromagnetic field which may interfere with the Wi-Fi signal.	Temporarily switch off each item in turn until you have identified the device causing the interference, then remove or re-position the offending device(s).

Connection extremely slow and / or keeps dropping out

Possible causes	Possible solutions
Wi-Fi performance degrades over distance, resulting in products farther away receiving less network bandwidth. Products installed close to their maximum Wi-Fi range will experience slow connection speeds, signal drop-outs, or not being able to connect at all.	• Move devices physically closer together. • For fixed installations such as a Quantum Radar, enable the Wi-Fi connection on a display installed closer to the device.
Interference being caused by other Wi-Fi enabled or older Bluetooth enabled devices (Bluetooth and Wi-Fi both operate in the 2.4 GHz frequency band; some older Bluetooth devices may interfere with Wi-Fi signals.)	1. Change the Wi-Fi Channel of the device you are trying to connect to, and then retry the connection. You can use a free Wi-Fi analyzer app on your mobile or tablet device to help you choose a better channel (i.e. a channel with the least amount of traffic). 2. Temporarily switch off each device in turn until you have identified the device causing the interference, then remove or re-position the offending device(s).
Interference from devices on other vessels. When in close proximity to other vessels, such as when moored up in a marina, many other Wi-Fi signals may be present.	1. Change the Wi-Fi Channel of the device you are trying to connect to, and then retry the connection. You can use a free Wi-Fi analyzer app on your mobile or tablet device to help you choose a better channel (i.e. a channel with the least amount of traffic). 2. If possible, move your vessel to a location with less Wi-Fi traffic.

Network connection established, but no data

Possible causes	Possible solutions
Connected to the wrong network	Ensure that your device is connected to the correct network.
Device software incompatibility	Ensure both devices are running the latest available software.
The device may be defective	1. Try updating software to a later version, or: 2. Re-install the software. 3. Obtain new replacement device.

Mobile application running slowly, or not at all

Possible causes	Possible solutions
Raymarine® app not installed	Install mobile app from relevant app store.
Raymarine® app version not compatible with display software	Ensure mobile app and display software are latest available versions.
Mobile apps not enabled on the chartplotter.	Enable “Viewing only” or “Remote Control” as required in the Mobile Apps setting on your chartplotter.

17.8 Touchscreen troubleshooting

Problems with the touchscreen and their possible causes and solutions are described here.

Touchscreen does not operate as expected:

Possible causes	Possible solutions
TouchLock is enabled.	Swipe your finger from left to right across the *[Power]* button swipe area to de-activate the TouchLock.
Screen is not being operated with bare fingers — for example, gloves are being worn.	Bare fingers must make contact with the screen for correct operation. Alternatively you may use conductive gloves.
Water deposits on the screen.	Carefully clean and dry the screen in accordance with the instructions provided.

CHAPTER 18: TECHNICAL SUPPORT

CHAPTER CONTENTS

- 18.1 Raymarine technical support and servicing — page 86
- 18.2 Learning resources — page 88

18.1 Raymarine technical support and servicing

Raymarine provides a comprehensive product support service, as well as warranty, service, and repairs. You can access these services through the Raymarine website, telephone, and e-mail.

Product information

If you need to request service or support, please have the following information to hand:

- Product name.
- Product identity.
- Serial number.
- Software application version.
- System diagrams.

Servicing and warranty

Raymarine offers dedicated service departments for warranty, service, and repairs.
Visit the Raymarine website to **read the latest warranty policy**, and **register** your product's warranty online:

- www.bit.ly/rym-warranty

United Kingdom (UK), EMEA, and Asia Pacific:

- Web: www.bit.ly/rym-service
- Tel: +44 (0)1329 246 932

United States (US):

- Web: www.bit.ly/rym-service
- Tel: +1 (603) 324 7900

Web support

Please visit the "Support" area of the Raymarine website for:

- **Manuals and Documents** — www.bit.ly/rym-docs
- **Technical support forum** — www.bit.ly/rym-support
- **Software updates** — www.bit.ly/rym-software

Telephone and online support

Region	Contact details
All regions	**Online support:** www.bit.ly/rym-support
United Kingdom (UK) and EMEA	**Telephone:** +44 (0)1329 246 777 **Address:** Marine House, Cartwright Drive, Fareham, PO15 5RJ, UK.
United States (US)	**Telephone:** Tel: +1 (603) 324 7900 (Toll-free: +800 539 5539) **Address:** 110 Lowell Road, Hudson, NH 03051, USA.
Australia and New Zealand (Raymarine subsidiary)	**Telephone:** +61 2 8977 0300 **Address:** Suite 1.01, 26 Rodborough Road, Frenchs Forest, NSW, 2086, Australia.
France (Raymarine subsidiary)	**Telephone:** +33 (0)1 46 49 72 30 **Address:** 35 avenue Michel Crépeau, 17000 La Rochelle - France.
Germany (Raymarine subsidiary)	**Telephone:** +49 40 237 808 0 **Address:** Atlantic-Haus, Zirkusweg 1, 20359 Hamburg.
Italy (Raymarine subsidiary)	**Telephone:** +39 02 9945 1001 **Address:** Via L. Manara 2, 20812 Limbiate (MB), Italy.
Spain (Authorized Raymarine distributor)	**Telephone:** +34 96 2965 102 **Email:** sat@azimut.es
Netherlands / Benelux (Authorized Raymarine distributor)	**Telephone:** +31 (0)26 3614 905 **Address:** Florijnweg 21G, 6883 JN VELP, Nederland.

Region	Contact details
Sweden (Raymarine subsidiary)	**Telephone:** +46 (0)317 633 670 **Address:** Bolshedens Industriväg 18, 427 50 Billdal, Sweden.
Finland (Raymarine subsidiary)	**Telephone:** +358 (0)207 619 937 **Address:** Suomalaistentie 1-3, 02270 Espoo, Finland.
Norway (Raymarine subsidiary)	**Telephone:** +47 692 64 600 **Address:** Årvollskogen 30, 1529 Moss, Norway.
Denmark (Raymarine subsidiary)	**Telephone:** +45 437 164 64 **Address:** Centervej 7, 4600 Køge, Denmark.
Russia (Distributor)	**Telephone:** Tel: +7 495 788 0508 **Email:** info@mikstmarine.ru

Viewing product information

Use the *[Settings]* menu to view hardware and software information about your display, and connected products.

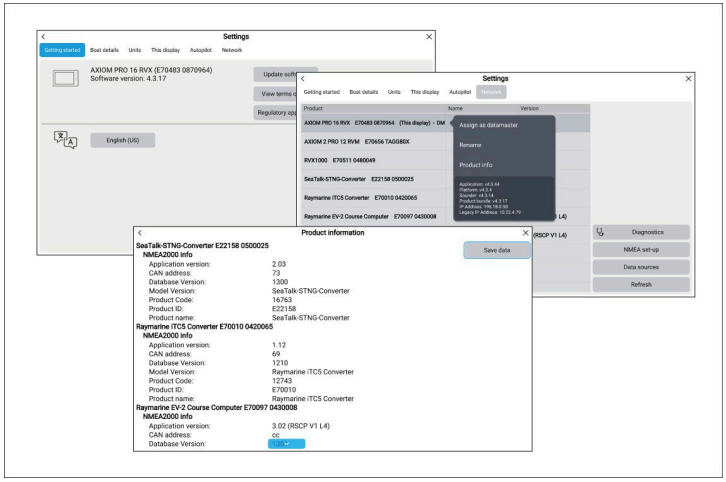

1. Select *[Settings]*, from the Homescreen.

   The *[Getting started]* menu contains hardware and software information for your display.

2. You can view further information about your display, or view information about products networked using SeaTalk HS and SeaTalk NG / NMEA 2000, by selecting the *[Network]* tab, then:
   i. to display detailed software information and your display's network IP address, select your display from the list.
   ii. to display detailed diagnostics information for all products, select *[Product info]* from the *[Diagnostics]* pop over menu.

Remote Support via AnyDesk

LightHouse 3 software versions v3.13 or later support remote support functions via the preloaded AnyDesk app.

The AnyDesk app enables a Raymarine Product Support representative to remotely connect to and control your display over an Internet connection, for the purposes of technical support and troubleshooting.

To get started, you will first need to contact Raymarine Product Support. If the representative considers that your support case would benefit from a remote session, you need to first ensure that

your display has an active Internet connection via Wi-Fi. Next, launch the AnyDesk app from your display's homescreen, and then provide the displayed unique ID to the Raymarine Product Support representative. Then follow any further instructions provided to you by the representative.

Attention

- **AnyDesk is provided for troubleshooting and support purposes only, and is NOT intended to perform remote functions on your vessel. Raymarine will NOT be held liable for damage or injury to equipment or persons caused by the use of a remote connection to your display.**
- **Do not disclose your AnyDesk ID to anyone other than authorized Raymarine Product Support personnel.**
- **Do not use the AnyDesk app to remotely activate connected devices such as Autopilot, Radar or Sonar hardware.**

18.2 Learning resources

Raymarine has produced a range of learning resources to help you get the most out of your products.

Video tutorials

Raymarine official channel on YouTube

- http://www.youtube.com/user/RaymarineInc

Training courses

Raymarine regularly runs a range of in-depth training courses to help you make the most of your products. Visit the Training section of the Raymarine website for more information:

- www.bit.ly/rym-training

Technical support forum

You can use the Technical support forum to ask a technical question about a Raymarine product or to find out how other customers are using their Raymarine equipment. The resource is regularly updated with contributions from Raymarine customers and staff:

- www.bit.ly/rym-support

CHAPTER 19: AXIOM 2 XL 16 TECHNICAL SPECIFICATION

CHAPTER CONTENTS

- 19.1 Power specification — page 90
- 19.2 Environmental specification — page 90
- 19.3 LCD specification — page 90
- 19.4 Physical specification — page 90
- 19.5 Connections specification — page 91
- 19.6 Internal GNSS (GPS) receiver specification — page 91
- 19.7 Conformance/approvals — page 92
- 19.8 Product markings — page 92

19.1 Power specification

Specification	
Nominal supply voltage:	12 V / 24 V dc
Operating voltage range:	8 V dc to 32 V dc
Current (Maximum):	8.56 A
Off-current (Maximum @ 12 V dc):	• PoE — 2,135 mA (25.62 Watts) — *Display is powered off, but supplying network data and power to connected PoE network devices.* • No PoE — 352 mA (4.32 Watts) — *Display is powered off, but supplying network data to connected non-PoE network devices.*
Off-current (Maximum @ 24 V dc):	• PoE — 1,161 mA (27.86 Watts) — *Display is powered off, but supplying network data and power to connected PoE network devices.* • No PoE — 352 mA (5.54 Watts) — *Display is powered off, but supplying network data to connected non-PoE network devices.*
PoE operating voltage range:	9.5 V dc to 32 V dc
Fuse requirements:	• Inline fuse = 15 Amp, or • Thermal breaker = 15 Amp
Power consumption: (Maximum @ 12 V dc):	76.56 Watts
Power consumption: (Maximum @ 24 V dc):	71.35 Watts

19.2 Environmental specification

Specification	
Operating temperature range:	-25° C (-13° F) to + 55° C (131° F)
Storage temperature range:	-30°C (-22° F) to + 70° C (158° F)
Humidity:	up to 93% @ 40° C (104° F)
Water ingress protection:	IPx6 and IPx7
Installation location:	• Above decks • Below decks

19.3 LCD specification

Specification	
Size (diagonal):	15.6”
Type:	IPS (In-Plane Switching)
Color depth:	24 bit
Resolution:	1920 x 1080 FHD
Aspect ratio:	16:9
Brightness / Luminance:	1300 nits / 1300 cd/m^2
Viewing angle:	Top 88° / Bottom 88° / Left 88° / Right 88°
Number of simultaneous touches:	2

19.4 Physical specification

Specification	
Gross (boxed) product weight:	8.32 kg (18.34 lbs)
Net (unboxed) product weight:	5.84 kg (12.88 lbs)

Specification	
Dimensions:	Height: 248.22 mm (9.77 in), Width, 394.9 mm (15.55 in), Depth (including cables): 174.95 mm (6.89 in).
Internal storage:	64 GB solid state.
External storage:	Remote card reader required.

19.5 Connections specification

Specification	
Accessory connection:	USB Micro B (for external card reader connection).
Analog video connections:	Composite BNC connectors x 2 (Video 1 via alarm/video cable accessory cable, Video 2 via Power/Video/Audio cable).
Audio connections:	Left and Right RCA connectors via Power/Video/Audio cable.
Ethernet connections:	PoE RayNet (10/100/1,000 Mbits/s) x 3.
External alarm connection:	Bare-ended wires x 2 (via Alarm/Video cable).
GPS antenna connection:	TNC type connector.
HDMI connections:	HDMI V1.4b input and output connectors.
NMEA 0183 connection:	NMEA 0183 TO NMEA 2000 convertor required (part number: A80721).
NMEA 2000 connection:	DeviceNet connector (Load Equivalency Number = 1).
USB connections:	USB-A: Touch input, USB-B: Touch output.

Specification	
Bluetooth connection:	Bluetooth: V4.0 combined with Wi-Fi module.
Wi-Fi connection:	Multi band - 2.4GHz, and 5Ghz 802.11b/g/n • Dual MIMO (Multiple In, Multiple Out) @ 2.4 GHz – 1x Antenna is used for Wi-Fi only – 1x Antenna is used for both Wi-Fi and Bluetooth 2.4GHz only (can simultaneously operate as an access point and as a host) • SISO (Single In, Single Out) @ 5 GHz – 1x Antenna is used for Wi-Fi only – 1x Antenna is used for Bluetooth only

19.6 Internal GNSS (GPS) receiver specification

Specification	
Almanac Update:	Automatic
Antenna:	An external passive antenna is required.
Channels:	Track up to 28 satellites simultaneously.
Cold start (Time To First Fix):	<2 minutes.
Geodetic Datum:	WGS-84 (alternatives can be selected on the display)

Specification	
GNSS compatibility:	• GPS • GLONASS • Beidou • Galileo
Operating frequency:	1574 MHz to 1605 MHz.
Position Accuracy:	• Without SBAS: <= 15 metres 95% of the time. • With SBAS: <= 5 metres 95% of the time.
Receiver IC Sensitivity:	• 165 dBm (Tracking) • 160 dBm (Re-acquisition) • 148 dBm (Cold start)
Refresh Rate:	10 Hz (10 times per second)
SBAS compatibility:	• EGNOS • GAGAN • MSAS • QZSS • WAAS
Signal Acquisition:	Automatic

19.7 Conformance/approvals

This product is compliant or approved to the following standards or by the listed entities.

- Radio Equipment Directive 2014/53/EU
- EN 60945:2002 (Europe, Australia New Zealand)
- FCC Part 15C and Part 15E
- ISED ICES-003
- NMEA 2000 certified

19.8 Product markings

The product includes the following approval / compliance markings and/or IDs.

- UKCA
- CE
- FCC
- ISED
- Japan
- Australian Tick
- Brazil Anatel
- WEEE Directive

CHAPTER 20: AXIOM 2 XL 19 TECHNICAL SPECIFICATION

CHAPTER CONTENTS

- 20.1 Power specification — page 94
- 20.2 Environmental specification — page 94
- 20.3 LCD specification — page 94
- 20.4 Physical specification — page 94
- 20.5 Connections specification — page 95
- 20.6 Internal GNSS (GPS) receiver specification — page 95
- 20.7 Conformance/approvals — page 96
- 20.8 Product markings — page 96

20.1 Power specification

Specification	
Nominal supply voltage:	12 V / 24 V dc
Operating voltage range:	8 V dc to 32 V dc
Current (Maximum):	8.98 A
Off-current (Maximum @ 12 V dc):	• PoE — 2,135 mA (25.62 Watts) — *Display is powered off, but supplying network data and power to connected PoE network devices.* • No PoE — 352 mA (4.32 Watts) — *Display is powered off, but supplying network data to connected non-PoE network devices.*
Off-current (Maximum @ 24 V dc):	• PoE — 1,161 mA (27.86 Watts) — *Display is powered off, but supplying network data and power to connected PoE network devices.* • No PoE — 352 mA (5.54 Watts) — *Display is powered off, but supplying network data to connected non-PoE network devices.*
PoE operating voltage range:	9.5 V dc to 32 V dc
Fuse requirements:	• Inline fuse = 15 Amp, or • Thermal breaker = 15 Amp
Power consumption: (Maximum @ 12 V dc):	85.42 Watts
Power consumption: (Maximum @ 24 V dc):	73.98 Watts

20.2 Environmental specification

Specification	
Operating temperature range:	-25° C (-13° F) to + 55° C (131° F)
Storage temperature range:	-30°C (-22° F) to + 70° C (158° F)
Humidity:	up to 93% @ 40° C (104° F)
Water ingress protection:	IPx6 and IPx7
Installation location:	• Above decks • Below decks

20.3 LCD specification

Specification	
Size (diagonal):	18.5”
Type:	IPS (In-Plane Switching)
Color depth:	24 bit
Resolution:	1920 x 1080 FHD
Aspect ratio:	16:9
Brightness / Luminance:	1200 nits / 1200 cd/m^2
Viewing angle:	Top 88° / Bottom 88° / Left 88° / Right 88°
Number of simultaneous touches:	2

20.4 Physical specification

Specification	
Gross (boxed) product weight:	10.10 kg (22.27 lbs)
Net (unboxed) product weight:	7.62 kg (16.80 lbs)

Specification	
Dimensions:	Height: 289.44 mm (11.40 in), Width, 461.78 mm (18.18 in), Depth (including cables): 174.95 mm (6.89 in).
Internal storage:	64 GB solid state.
External storage:	Remote card reader required.

20.5 Connections specification

Specification	
Accessory connection:	USB Micro B (for external card reader connection).
Analog video connections:	Composite BNC connectors x 2 (Video 1 via alarm/video cable accessory cable, Video 2 via Power/Video/Audio cable).
Audio connections:	Left and Right RCA connectors via Power/Video/Audio cable.
Ethernet connections:	PoE RayNet (10/100/1,000 Mbits/s) x 3.
External alarm connection:	Bare-ended wires x 2 (via Alarm/Video cable).
GPS antenna connection:	TNC type connector.
HDMI connections:	HDMI V1.4b input and output connectors.
NMEA 0183 connection:	NMEA 0183 TO NMEA 2000 convertor required (part number: A80721).
NMEA 2000 connection:	DeviceNet connector (Load Equivalency Number = 1).
USB connections:	USB-A: Touch input, USB-B: Touch output.

Specification	
Bluetooth connection:	Bluetooth: V4.0 combined with Wi-Fi module.
Wi-Fi connection:	Multi band - 2.4GHz, and 5Ghz 802.11b/g/n • Dual MIMO (Multiple In, Multiple Out) @ 2.4 GHz – 1x Antenna is used for Wi-Fi only – 1x Antenna is used for both Wi-Fi and Bluetooth 2.4GHz only (can simultaneously operate as an access point and as a host) • SISO (Single In, Single Out) @ 5 GHz – 1x Antenna is used for Wi-Fi only – 1x Antenna is used for Bluetooth only

20.6 Internal GNSS (GPS) receiver specification

Specification	
Almanac Update:	Automatic
Antenna:	An external passive antenna is required.
Channels:	Track up to 28 satellites simultaneously.
Cold start (Time To First Fix):	<2 minutes.
Geodetic Datum:	WGS-84 (alternatives can be selected on the display)

Specification	
GNSS compatibility:	• GPS • GLONASS • Beidou • Galileo
Operating frequency:	1574 MHz to 1605 MHz.
Position Accuracy:	• Without SBAS: <= 15 metres 95% of the time. • With SBAS: <= 5 metres 95% of the time.
Receiver IC Sensitivity:	• 165 dBm (Tracking) • 160 dBm (Re-acquisition) • 148 dBm (Cold start)
Refresh Rate:	10 Hz (10 times per second)
SBAS compatibility:	• EGNOS • GAGAN • MSAS • QZSS • WAAS
Signal Acquisition:	Automatic

20.7 Conformance/approvals

This product is compliant or approved to the following standards or by the listed entities.

- Radio Equipment Directive 2014/53/EU
- EN 60945:2002 (Europe, Australia New Zealand)
- FCC Part 15C and Part 15E
- ISED ICES-003
- NMEA 2000 certified

20.8 Product markings

The product includes the following approval / compliance markings and/or IDs.

- UKCA
- CE
- FCC
- ISED
- Japan
- Australian Tick
- Brazil Anatel
- WEEE Directive

CHAPTER 21: AXIOM 2 XL 22 TECHNICAL SPECIFICATION

CHAPTER CONTENTS

- 21.1 Power specification — page 98
- 21.2 Environmental specification — page 98
- 21.3 LCD specification — page 98
- 21.4 Physical specification — page 98
- 21.5 Connections specification — page 99
- 21.6 Internal GNSS (GPS) receiver specification — page 99
- 21.7 Conformance/approvals — page 100
- 21.8 Product markings — page 100

21.1 Power specification

Specification	
Nominal supply voltage:	12 V / 24 V dc
Operating voltage range:	8 V dc to 32 V dc
Current (Maximum):	10.12 A
Off-current (Maximum @ 12 V dc):	• PoE — 2,135 mA (25.62 Watts) — *Display is powered off, but supplying network data and power to connected PoE network devices.* • No PoE — 352 mA (4.32 Watts) — *Display is powered off, but supplying network data to connected non-PoE network devices.*
Off-current (Maximum @ 24 V dc):	• PoE — 1,161 mA (27.86 Watts) — *Display is powered off, but supplying network data and power to connected PoE network devices.* • No PoE — 352 mA (5.54 Watts) — *Display is powered off, but supplying network data to connected non-PoE network devices.*
PoE operating voltage range:	9.5 V dc to 32 V dc
Fuse requirements:	• Inline fuse = 15 Amp, or • Thermal breaker = 15 Amp
Power consumption: (Maximum @ 12 V dc):	94.25 Watts
Power consumption: (Maximum @ 24 V dc):	79.46 Watts

21.2 Environmental specification

Specification	
Operating temperature range:	-25° C (-13° F) to + 55° C (131° F)
Storage temperature range:	-30°C (-22° F) to + 70° C (158° F)
Humidity:	up to 93% @ 40° C (104° F)
Water ingress protection:	IPx6 and IPx7
Installation location:	• Above decks • Below decks

21.3 LCD specification

Specification	
Size (diagonal):	21.5”
Type:	IPS (In-Plane Switching)
Color depth:	24 bit
Resolution:	1920 x 1080 FHD
Aspect Ratio:	16:9
Brightness / Luminance:	1275 nits / 1275 cd/m^2
Viewing angle:	Top 89° / Bottom 89° / Left 89° / Right 89°
Number of simultaneous touches:	2

21.4 Physical specification

Specification	
Gross (boxed) product weight:	12.98 kg (28.62 lbs)
Net (unboxed) product weight:	9.72 kg (21.43 lbs)

Specification	
Dimensions:	Height: 326.33 mm (12.85 in), Width, 533.56 mm (21.00 in), Depth (including cables): 180.75 mm (7.12 in).
Internal storage:	64 GB solid state.
External storage:	Remote card reader required.

21.5 Connections specification

Specification	
Accessory connection:	USB Micro B (for external card reader connection).
Analog video connections:	Composite BNC connectors x 2 (Video 1 via alarm/video cable accessory cable, Video 2 via Power/Video/Audio cable).
Audio connections:	Left and Right RCA connectors via Power/Video/Audio cable.
Ethernet connections:	PoE RayNet (10/100/1,000 Mbits/s) x 3.
External alarm connection:	Bare-ended wires x 2 (via Alarm/Video cable).
GPS antenna connection:	TNC type connector.
HDMI connections:	HDMI V1.4b input and output connectors.
NMEA 0183 connection:	NMEA 0183 TO NMEA 2000 convertor required (part number: A80721).
NMEA 2000 connection:	DeviceNet connector (Load Equivalency Number = 1).
USB connections:	USB-A: Touch input, USB-B: Touch output.

Specification	
Bluetooth connection:	Bluetooth: V4.0 combined with Wi-Fi module.
Wi-Fi connection:	Multi band - 2.4GHz, and 5Ghz 802.11b/g/n • Dual MIMO (Multiple In, Multiple Out) @ 2.4 GHz – 1x Antenna is used for Wi-Fi only – 1x Antenna is used for both Wi-Fi and Bluetooth 2.4GHz only (can simultaneously operate as an access point and as a host) • SISO (Single In, Single Out) @ 5 GHz – 1x Antenna is used for Wi-Fi only – 1x Antenna is used for Bluetooth only

21.6 Internal GNSS (GPS) receiver specification

Specification	
Almanac Update:	Automatic
Antenna:	An external passive antenna is required.
Channels:	Track up to 28 satellites simultaneously.
Cold start (Time To First Fix):	<2 minutes.
Geodetic Datum:	WGS-84 (alternatives can be selected on the display)

Specification	
GNSS compatibility:	• GPS • GLONASS • Beidou • Galileo
Operating frequency:	1574 MHz to 1605 MHz.
Position Accuracy:	• Without SBAS: <= 15 metres 95% of the time. • With SBAS: <= 5 metres 95% of the time.
Receiver IC Sensitivity:	• 165 dBm (Tracking) • 160 dBm (Re-acquisition) • 148 dBm (Cold start)
Refresh Rate:	10 Hz (10 times per second)
SBAS compatibility:	• EGNOS • GAGAN • MSAS • QZSS • WAAS
Signal Acquisition:	Automatic

21.7 Conformance/approvals

This product is compliant or approved to the following standards or by the listed entities.

- Radio Equipment Directive 2014/53/EU
- EN 60945:2002 (Europe, Australia New Zealand)
- FCC Part 15C and Part 15E
- ISED ICES-003
- NMEA 2000 certified

21.8 Product markings

The product includes the following approval / compliance markings and/or IDs.

- UKCA
- CE
- FCC
- ISED
- Japan
- Australian Tick
- Brazil Anatel
- WEEE Directive

CHAPTER 22: AXIOM 2 XL 24 TECHNICAL SPECIFICATION

CHAPTER CONTENTS

- 22.1 Power specification — page 102
- 22.2 Environmental specification — page 102
- 22.3 LCD specification — page 102
- 22.4 Physical specification — page 103
- 22.5 Connections specification — page 103
- 22.6 Internal GNSS (GPS) receiver specification — page 103
- 22.7 Conformance/approvals — page 104
- 22.8 Product markings — page 104

22.1 Power specification

Specification	
Nominal supply voltage:	12 V / 24 V dc
Operating voltage range:	8 V dc to 32 V dc
Current (Maximum):	10.03 A
Off-current (Maximum @ 12 V dc):	• PoE — 2,135 mA (25.62 Watts) — *Display is powered off, but supplying network data and power to connected PoE network devices.* • No PoE — 352 mA (4.32 Watts) — *Display is powered off, but supplying network data to connected non-PoE network devices.*
Off-current (Maximum @ 24 V dc):	• PoE — 1,161 mA (27.86 Watts) — *Display is powered off, but supplying network data and power to connected PoE network devices.* • No PoE — 352 mA (5.54 Watts) — *Display is powered off, but supplying network data to connected non-PoE network devices.*
PoE operating voltage range:	9.5 V dc to 32 V dc
Fuse requirements:	• Inline fuse = 15 Amp, or • Thermal breaker = 15 Amp
Power consumption: (Maximum @ 12 V dc):	92.50 Watts
Power consumption: (Maximum @ 24 V dc):	77.96 Watts

22.2 Environmental specification

Specification	
Operating temperature range:	-25°C (-13°F) to + 55°C (131°F)
Storage temperature range:	-30°C (–22°F) to + 70°C (158°F)
Humidity:	up to 93% @ 40°C (104°F)
Water ingress protection:	IPx6 and IPx7
Installation location:	• Above decks (protected from direct sunlight) • Below decks

22.3 LCD specification

Specification	
Size (diagonal):	24”
Type:	IPS (In-Plane Switching)
Color depth:	24 bit
Resolution:	1920 x 1200 (WUXGA)
Aspect ratio:	16:10
Brightness / Luminance:	1300 nits / 1300 cd/m^2
Viewing angle:	Top 89° / Bottom 89° / Left 89° / Right 89°
Number of simultaneous touches:	2

22.4 Physical specification

Specification	
Gross (boxed) product weight:	15.06 kg (33.20 lbs)
Net (unboxed) product weight:	11.78 kg (25.97 lbs)
Dimensions:	Height: 386.84 mm (15.23 in), Width, 578.40 mm (22.77 in), Depth (including cables): 177.39 mm (6.98 in) .
Internal storage:	64 GB solid state.
External storage:	Remote card reader required.

22.5 Connections specification

Specification	
Accessory connection:	USB Micro B (for external card reader connection).
Analog video connections:	Composite BNC connectors x 2 (Video 1 via alarm/video cable accessory cable, Video 2 via Power/Video/Audio cable).
Audio connections:	Left and Right RCA connectors via Power/Video/Audio cable.
Ethernet connections:	PoE RayNet (10/100/1,000 Mbits/s) x 3.
External alarm connection:	Bare-ended wires x 2 (via Alarm/Video cable).
GPS antenna connection:	TNC type connector.
HDMI connections:	HDMI V1.4b input and output connectors.
NMEA 0183 connection:	NMEA 0183 TO NMEA 2000 convertor required (part number: A80721).
NMEA 2000 connection:	DeviceNet connector (Load Equivalency Number = 1).
USB connections:	USB-A: Touch input, USB-B: Touch output.
Bluetooth connection:	Bluetooth: V4.0 combined with Wi-Fi module.
Wi-Fi connection:	Multi band - 2.4GHz, and 5Ghz 802.11b/g/n • Dual MIMO (Multiple In, Multiple Out) @ 2.4 GHz – 1x Antenna is used for Wi-Fi only – 1x Antenna is used for both Wi-Fi and Bluetooth 2.4GHz only (can simultaneously operate as an access point and as a host) • SISO (Single In, Single Out) @ 5 GHz – 1x Antenna is used for Wi-Fi only – 1x Antenna is used for Bluetooth only

22.6 Internal GNSS (GPS) receiver specification

Specification	
Almanac Update:	Automatic
Antenna:	An external passive antenna is required.
Channels:	Track up to 28 satellites simultaneously.
Cold start (Time To First Fix):	<2 minutes.
Geodetic Datum:	WGS-84 (alternatives can be selected on the display)

Specification	
GNSS compatibility:	• GPS • GLONASS • Beidou • Galileo
Operating frequency:	1574 MHz to 1605 MHz.
Position Accuracy:	• Without SBAS: <= 15 metres 95% of the time. • With SBAS: <= 5 metres 95% of the time.
Receiver IC Sensitivity:	• 165 dBm (Tracking) • 160 dBm (Re-acquisition) • 148 dBm (Cold start)
Refresh Rate:	10 Hz (10 times per second)
SBAS compatibility:	• EGNOS • GAGAN • MSAS • QZSS • WAAS
Signal Acquisition:	Automatic

22.7 Conformance/approvals

This product is compliant or approved to the following standards or by the listed entities.

- Radio Equipment Directive 2014/53/EU
- EN 60945:2002 (Europe, Australia New Zealand)
- FCC Part 15C and Part 15E
- ISED ICES-003
- NMEA 2000 certified

22.8 Product markings

The product includes the following approval / compliance markings and/or IDs.

- UKCA
- CE
- FCC
- ISED
- Japan
- Australian Tick
- Brazil Anatel
- WEEE Directive

CHAPTER 23: SPARES AND ACCESSORIES

CHAPTER CONTENTS

- 23.1 Accessories — page 106
- 23.2 Spares — page 107
- 23.3 RayNet to RayNet cables and connectors — page 108
- 23.4 RayNet to RJ45, and RJ45 (SeaTalk HS) adapter cables — page 110
- 23.5 SeaTalk NG cables and accessories — page 112

23.1 Accessories

The following accessories are available for displays:

Accessory pack (T70431) contents

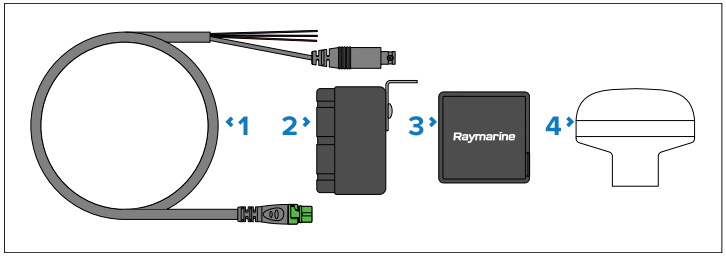

	Part number and Description
1	Alarm output and analog video input, 2 m (6.56 ft) cable (Part number: A80235)
2	Alarm buzzer (Part number: E26033)
3	RCR-SDUSB card reader (Part number: A80440)
4	GA200 passive GNSS (GPS) antenna (Part number: A80589)

Accessories

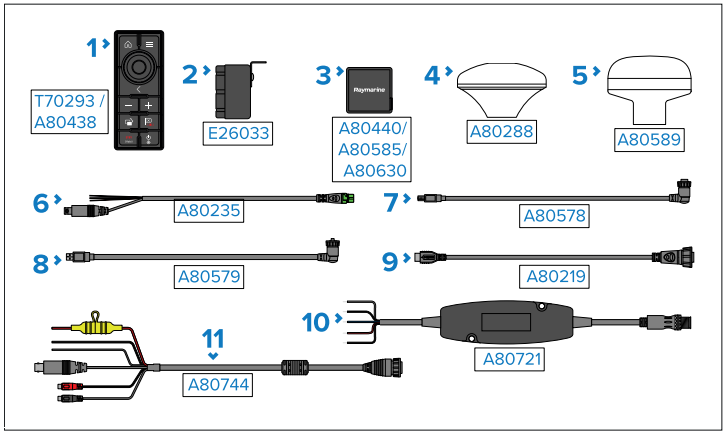

	Part number and Description
1	RMK-10 — display remote control (Part number: T70293/A80438)
2	Alarm buzzer (Part number: E26033)
3	• RCR-SDUSB card reader (Part number: A80440) • RCR-1 card reader (Part number: A80585) • Bulkhead Mount Micro USB Socket (Part number: A80630)
4	GA150 passive GNSS (GPS) antenna (Part number: A80288)
5	GA200 passive GNSS (GPS) antenna (Part number: A80589)
6	Alarm output and analog video input 2 m (6.56 ft) cable (Part number: A80235)
7	Straight USB Type B to right-angled USB Type A (touch input) 5 m (16.4 ft) cable (Part number: A80578)
8	Straight USB Type A to right-angled USB Type B (touch output) 5 m (16.4 ft) cable (Part number: A80579)
9	HDMI cable 5 m (16.4 ft) cable (Part number: A80219)
10	Actisense® NGW-1 NMEA 2000 (DeviceNet) to NMEA 0183 converter (Part number: A80721)
11	Straight power / video / audio cable - 1.5 m (4.92 ft) (Part number A80744)

23.2 Spares

The following spares are available for displays:

Rear mounting kits

- 16” Rear mounting kit (part number: R70668)
- 19” Rear mounting kit (part number: R70669)
- 22” Rear mounting kit (part number: R70675)
- 24” Rear mounting kit (part number: R70670)

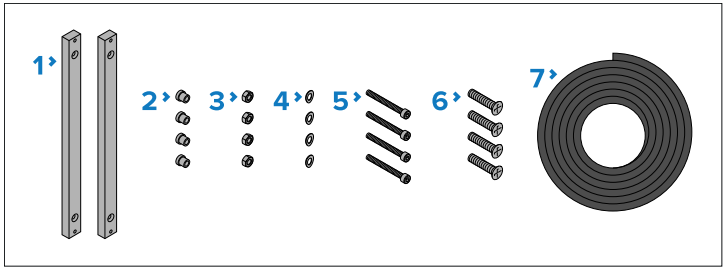

	Kit contents
1	Mounting bars x 2
2	Mounting foot x 4
3	M5x40 Hex socket screw x 4
4	M5 Nut x 4
5	M5 Wavy washer x 4
6	M5x20 machine screw x 4
7	Panel mount gasket

Other spares

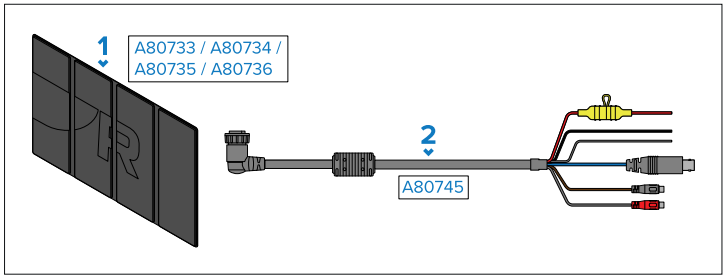

	Description
1	• 16” sun cover (Part number: A80733) • 19” sun cover (Part number: A80734) • 22” sun cover (Part number: A80735) • 24” sun cover (Part number: A80736)
2	Right-angled power / video / audio cable, 1.5 m (4.92 ft) (part number: A80745). A power / video / audio cable with a straight connector is also available: (part number: A80744).

23.3 RayNet to RayNet cables and connectors

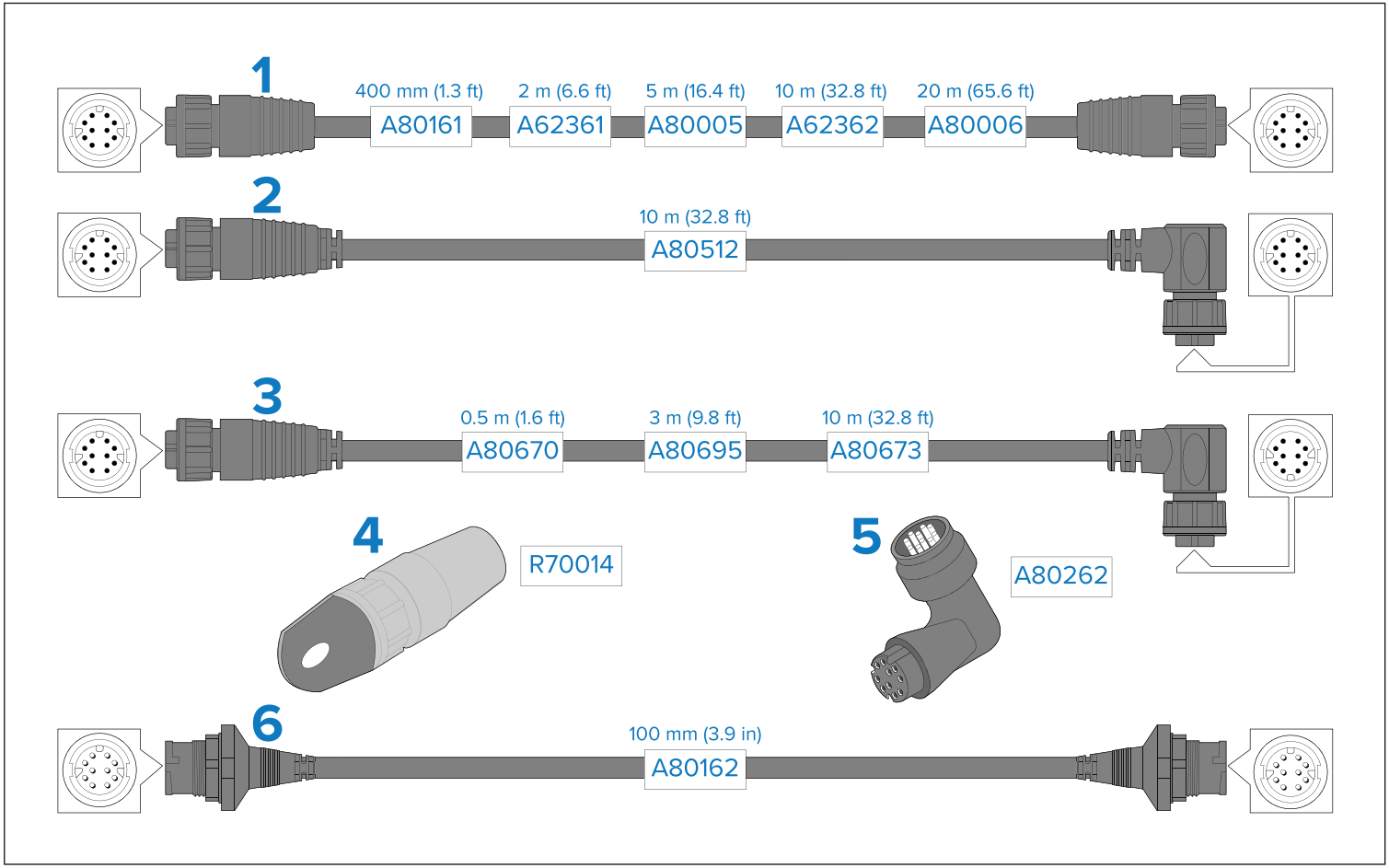

1. Standard RayNet connection cable with a RayNet (female) socket on both ends.
2. Right-angle RayNet connection cable with a straight RayNet (female) socket on one end, and a right-angle RayNet (female) socket on the other end. Suitable for connecting at 90° (right angle) to a device, for installations where space is limited.
3. Right-angle RayNet connection cable with a straight RayNet (female) socket on one end, and a right-angle RayNet (female) socket on the other end. Available as an alternative to the (A80512) accessory cable, for installations which require an alternate cable routing direction.
4. RayNet cable puller (5 pack).

5. RayNet to RayNet right-angle coupler / adapter. Suitable for connecting RayNet cables at 90° (right angle) to devices, for installations where space is limited.
6. Adapter cable with a RayNet (male) plug on both ends. Suitable for joining (female) RayNet cables together for longer cable runs.

23.4 RayNet to RJ45, and RJ45 (SeaTalk HS) adapter cables

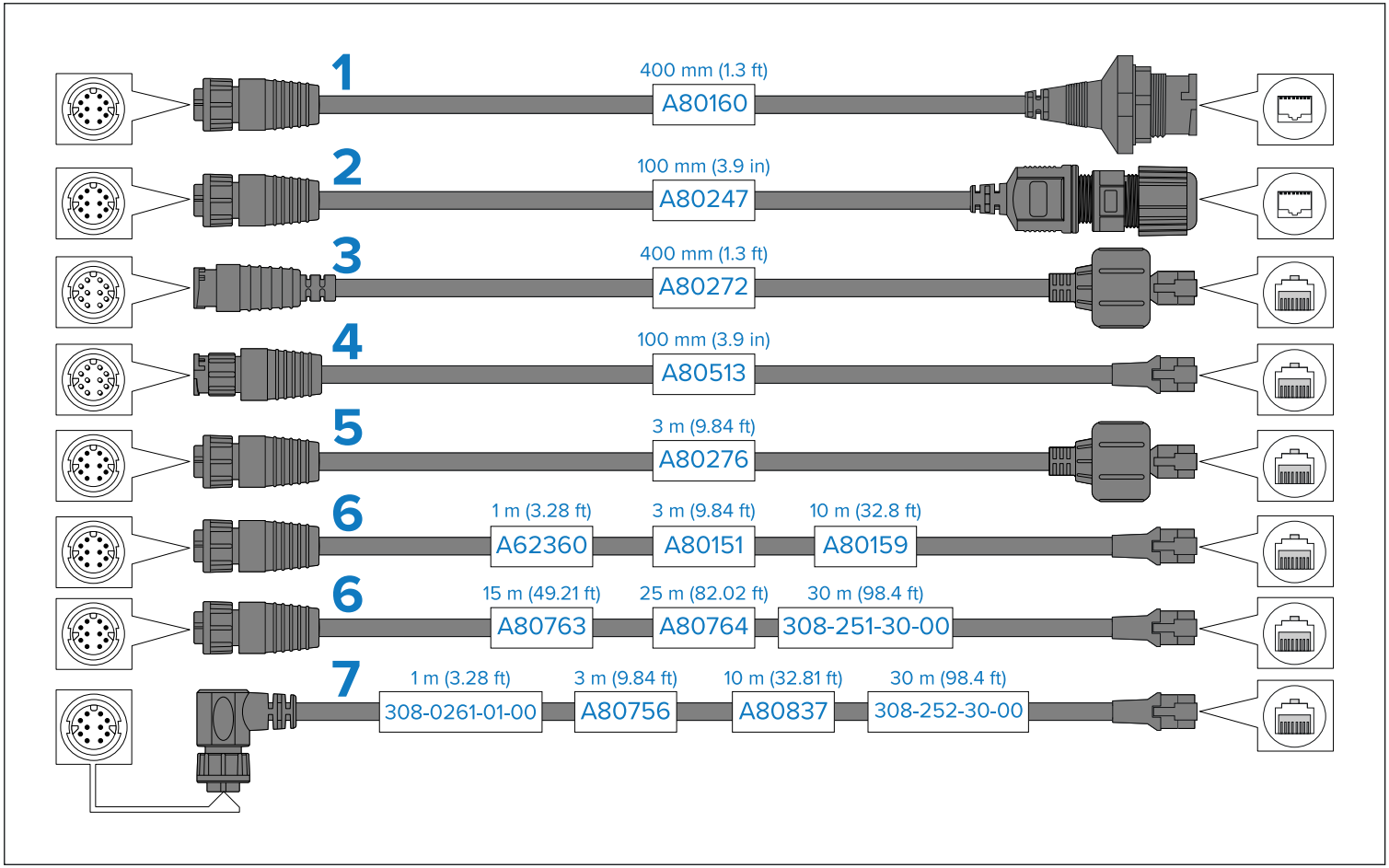

1. Adapter cable with a RayNet (female) socket on one end, and a waterproof (female) RJ45 (SeaTalk HS) socket on the other end, accepting the following cables with an RJ45 (SeaTalk HS) waterproof locking (male) plug:
   - A62245 (1.5 m).
   - A62246 (15 m).
2. Adapter cable with a RayNet (female) socket on one end, and a waterproof (female) RJ45 (SeaTalk HS) socket on the other end, along with a locking gland for a watertight fit.
3. Adapter cable with a RayNet (male) plug on one end, and an RJ45 (SeaTalk HS) waterproof (male) plug on the other end.

4. Adapter cable with a RayNet (male) plug on one end, and an RJ45 (male) plug on the other end.
5. Adapter cable with a RayNet (female) socket on one end, and an RJ45 (SeaTalk HS) waterproof (male) plug on the other end.
6. Adapter cable with a RayNet (female) socket on one end, and an RJ45 (male) plug on the other end.
7. Adapter cable with a right-angled RayNet (female) socket on one end, and an RJ45 (male) plug on the other end.

23.5 SeaTalk NG cables and accessories

SeaTalk NG cables and accessories for use with compatible products.

SeaTalk NG kits

SeaTalk NG kits enable you to create a simple SeaTalk NG backbone. **Starter kit (part number: T70134)** consists of:

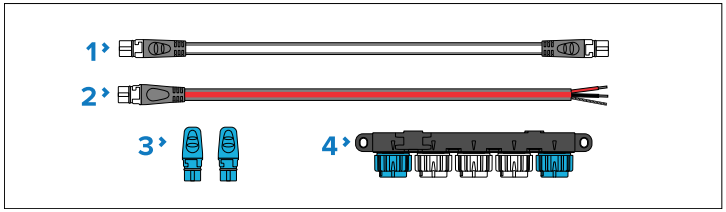

1. 1 x Spur cable 3 m (9.8 ft) (part number: **A06040**). Used to connect device to the SeaTalk NG backbone.
2. 1 x Power cable 2 m (6.6 ft) (part number: **A06049**). Used to provide 12 V dc power to the SeaTalk NG backbone.
3. 2 x Backbone terminators (part number: **A06031**). Terminators must be fitted to both ends of the SeaTalk NG backbone.
4. 1 x 5-Way connector (part number: **A06064**). Each connector block allows connection of up to 3 SeaTalk NG devices. Multiple connector blocks can be 'daisy chained' together.

Backbone kit (part number: A25062) consists of:

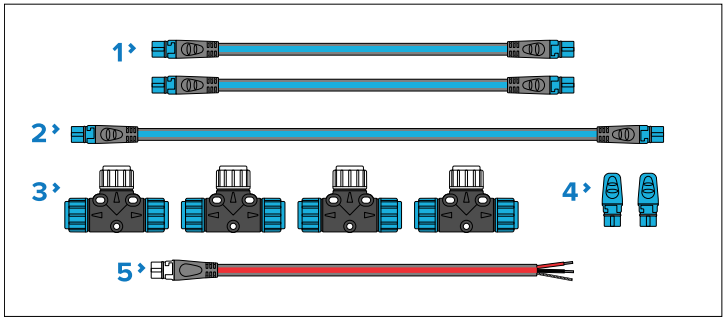

1. 2 x Backbone cables 5 m (16.4 ft) (part number: **A06036**). Used to create and extend the SeaTalk NG backbone.
2. 1 x Backbone cable 20 m (65.6 ft) (part number: **A06037**). Used to create and extend the SeaTalk NG backbone.
3. 4 x T-piece (part number: **A06028**). Each T-piece allows connection of one SeaTalk NG device. Multiple T-pieces can be 'daisy chained' together.
4. 2 x Backbone terminators (part number: **A06031**). Terminators must be fitted to both ends of the SeaTalk NG backbone.
5. 1 x Power cable 2 m (6.6 ft) (part number: **A06049**). Used to provide 12 V dc power to the SeaTalk NG backbone.

Evolution-Series autopilot cable kit (part number: R70160) consists of:

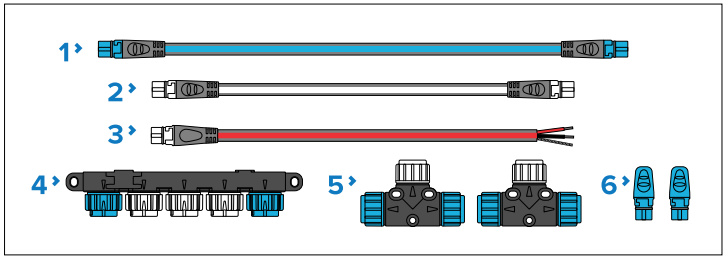

1. 1 x Backbone cable 5 m (16.4 ft) (part number: **A06036**). Used to create and extend the SeaTalk NG backbone.
2. 1 x Spur cable 1 m (3.3 ft) (part number: **A06040**). Used to connect device to the SeaTalk NG backbone.
3. 1 x Power cable 2 m (6.6 ft) (part number: **A06049**). Used to provide 12 V dc power to the SeaTalk NG backbone.
4. 1 x 5-Way connector (part number: **A06064**). Each connector block allows connection of up to 3 SeaTalk NG devices. Multiple connector blocks can be 'daisy chained' together.
5. 2 x T-pieces (part number: **A06028**). Each T-piece allows connection of one SeaTalk NG device. Multiple T-pieces can be 'daisy chained' together.
6. 2 x Backbone terminators (part number: **A06031**). Terminators must be fitted to both ends of the SeaTalk NG backbone.

SeaTalk 1 to SeaTalk NG converter kit (part number: E22158) consists of:

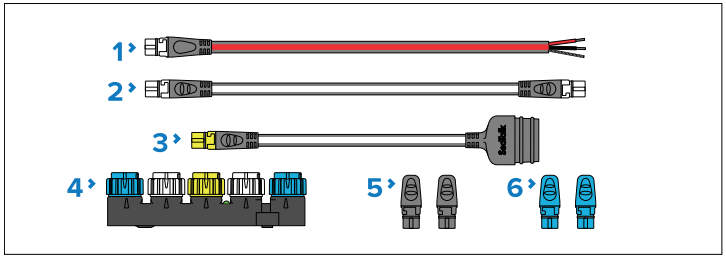

1. 1 x Power cable 2 m (6.6 ft) (part number: **A06049**). Used to provide 12 V dc power to the SeaTalk NG backbone.
2. 1 x Spur cable 1 m (3.3 ft) (part number: **A06039**). Used to connect a device to the SeaTalk NG backbone.
3. 1 x SeaTalk 1 (3 pin) to SeaTalk NG adapter cable 0.4 m (1.3 ft) (part number: **A22164**). Used to connect SeaTalk 1 devices to the SeaTalk NG backbone via the SeaTalk 1 to SeaTalk NG converter.
4. 1 x SeaTalk 1 to SeaTalk NG converter (part number: **E22158**). Each converter allows connection of one SeaTalk 1 device and up to 2 SeaTalk NG devices.
5. 2 x Spur blanking plugs (part number: **A06032**). Used to cover unused spur connections in 5-way blocks, T-piece connectors and SeaTalk 1 to SeaTalk NG converter.
6. 2 x Backbone terminators (part number: **A06031**). Terminators must be fitted to both ends of the SeaTalk NG backbone.

NMEA 0183 VHF 2-wire to SeaTalk NG converter kit (part number: E70196) consists of:

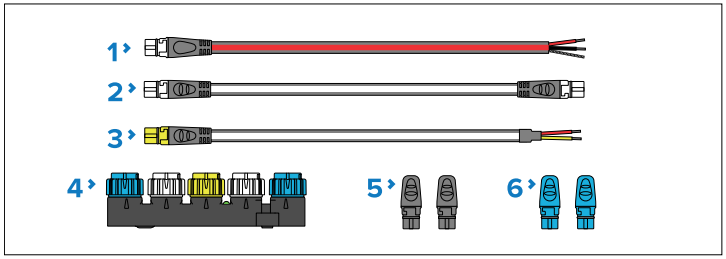

1. 1 x Power cable 2 m (6.6 ft) (part number: **A06049**). Used to provide 12 V dc power to the SeaTalk NG backbone.
2. 1 x Spur cable 1 m (3.3 ft) (part number: **A06039**). Used to connect a device to the SeaTalk NG backbone.
3. 1 x NMEA 0183 VHF stripped-end (2-wire) to SeaTalk NG adapter cable 1 m (3.3 ft) (part number: **A06071**). Used to connect an NMEA 0183 VHF radio to the SeaTalk NG backbone via the NMEA 0183 to SeaTalk NG converter.
4. 1 x SeaTalk 1 to SeaTalk NG converter (part number: **E22158**). Each converter allows connection of one SeaTalk 1 device and up to 2 SeaTalk NG devices.
5. 2 x Spur blanking plugs (part number: **A06032**). Used to cover unused spur connections in 5-way blocks, T-piece connectors, and the SeaTalk 1 to SeaTalk NG converter.
6. 2 x Backbone terminators (part number: **A06031**). Terminators must be fitted to both ends of the SeaTalk NG backbone.

SeaTalk NG spur cables

SeaTalk NG spur cables are required to connect devices to the SeaTalk NG backbone.

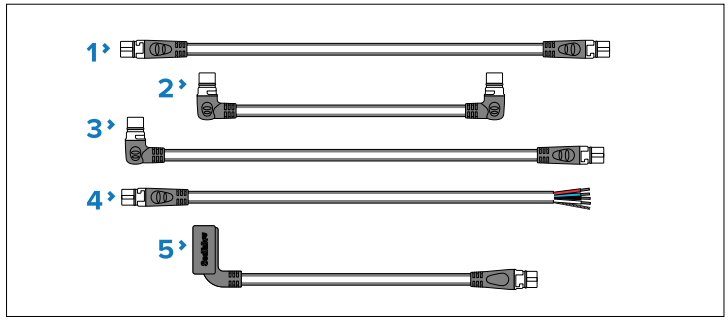

1. SeaTalk NG spur cables:
   - Spur cable 0.4 m (1.3 ft) (part number: **A06038**).
   - Spur cable 1 m (3.3 ft) (part number: **A06039**).
   - Spur cable 3 m (9.8 ft) (part number: **A06040**).
   - Spur cable 5 m (16.4 ft) (part number: **A06041**).
2. Elbow (right-angled) to elbow (right-angled) spur cable 0.4 m (1.3 ft) (part number: **A06042**). Used in confined spaces where a straight spur cable will not fit.
3. Elbow (right-angled) to straight spur cable 1 m (3.3 ft) (part number: **A06081**). Used in confined spaces where a straight spur cable will not fit.

4. SeaTalk NG to stripped-end spur cables (connects compatible products that do not have a SeaTalk NG connector, such as transducer pods):
   - SeaTalk NG to stripped-end spur cable 1 m (3.3 ft) (part number: **A06043**)
   - SeaTalk NG to stripped-end spur cable 3 m (9.8 ft) (part number: **A06044**)
5. ACU-200 / ACU-300 / ACU-400 / SPX-Series autopilot to SeaTalk NG spur cable 0.3 m (1.0 ft) (part number **R12112**). Connects the course computer to the SeaTalk NG backbone. This connection can also be used to provide 12 V dc power to the SeaTalk NG backbone.

SeaTalk NG backbone cables

SeaTalk NG backbone cables are used to create or extend a SeaTalk NG backbone.

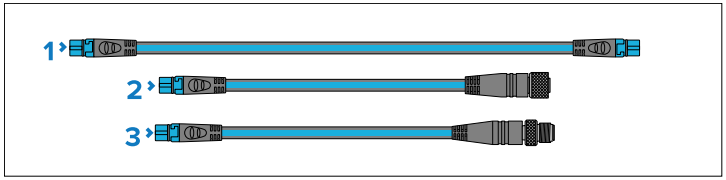

1. Backbone cables:
   - Backbone cable 0.4 m (1.3 ft) (part number: **A06033**).
   - Backbone cable 1 m (3.3 ft) (part number: **A06034**).
   - Backbone cable 3 m (9.8 ft) (part number: **A06035**).
   - Backbone cable 5 m (16.4 ft) (part number: **A06036**).
   - Backbone cable 9 m (29.5 ft) (part number: **A06068**).
   - Backbone cable 20 m (65.6 ft) (part number: **A06037**).
2. SeaTalk NG to DeviceNet (female) Backbone cable 0.4 m (1.3 ft) (part number: **A80675**)
3. SeaTalk NG to DeviceNet (male) Backbone cable 0.4 m (1.3 ft) (part number: **A80674**)

SeaTalk NG power cables

SeaTalk NG power cables are used to provide the SeaTalk NG backbone with a single 12 V dc power source. The power connection must include a 5 amp inline fuse (not supplied).

1. Power cable (straight) 2 m (6.6 ft) (part number: **A06049**).
2. Elbow (right-angled) power cable 2 m (6.6 ft) (part number: **A06070**).

SeaTalk NG connectors

SeaTalk NG connectors are used to connect SeaTalk NG devices to the SeaTalk NG backbone and to create and extend the backbone.

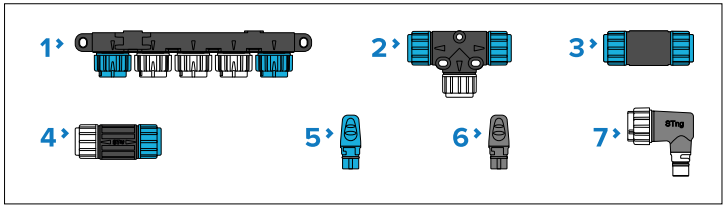

1. 5-Way connector (part number: **A06064**). Each connector block allows connection of up to 3 SeaTalk NG devices. Multiple connector blocks can be 'daisy chained' together.
2. T-piece (part number: **A06028**). Each T-piece allows connection of one SeaTalk NG device. Multiple T-pieces can be 'daisy chained' together.
3. Backbone extender (part number: **A06030**). Used to connect 2 backbone cables together.
4. Inline terminator (part number: **A80001**). Used to connect a spur cable and SeaTalk NG device at the end of a backbone instead of a backbone terminator.
5. Backbone terminator (part number: **A06031**). Terminators must be fitted to both ends of the SeaTalk NG backbone.
6. Spur blanking plug (part number: **A06032**). Used to cover unused spur connections in 5-Way blocks, T-piece connectors, or the SeaTalk 1 to SeaTalk NG converter.
7. Elbow (right-angled) spur connector (part number: **A06077**). Used in confined spaces where a straight spur cable will not fit.

SeaTalk NG adaptors and adaptor cables

SeaTalk NG adaptor cables are used to connect devices designed for different CAN Bus backbones (e.g.: SeaTalk 1 or DeviceNet) to the SeaTalk NG backbone.

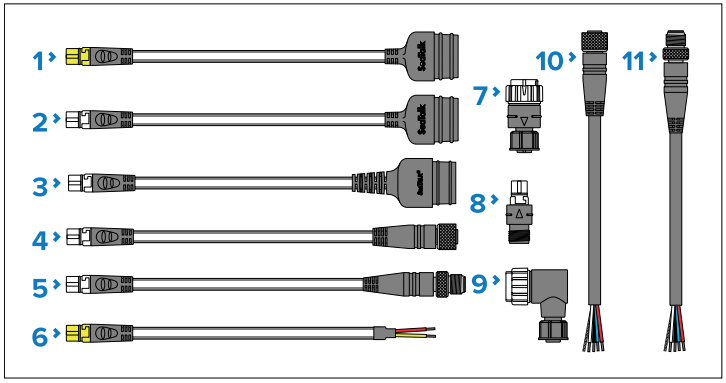

1. SeaTalk 1 (3 pin) to SeaTalk NG converter cable 1 m (3.3 ft) (part number: **A22164 / A06073**). Can be used to connect a SeaTalk 1 device to a SeaTalk NG backbone via the SeaTalk 1 to SeaTalk NG converter, or to connect a SeaTalk NG product directly to a SeaTalk 1 network.
2. SeaTalk 1 (3 pin) to SeaTalk NG adaptor cable 0.4 m (1.3 ft) (part number: **A06047**). Can be used to connect a SeaTalk 1 device to a SeaTalk NG backbone via the SeaTalk 1 to SeaTalk NG converter, or to connect a SeaTalk NG product directly to a SeaTalk 1 network.
3. SeaTalk 2 (5 pin) to SeaTalk NG adaptor cable 0.4 m (1.3 ft) (part number: **A06048**). Used to connect SeaTalk 2 devices or networks to a SeaTalk NG backbone.
4. SeaTalk NG to DeviceNet (female) adaptor cables connect NMEA 2000 devices that use a DeviceNet connector to the SeaTalk NG backbone, or connects SeaTalk NG devices to an NMEA 2000 network. The following cables are available:
   - SeaTalk NG to DeviceNet (female) adaptor cable 0.4 m (1.3 ft) (part number: **A06045**).
   - SeaTalk NG to DeviceNet (female) adaptor cable 1 m (3.3 ft) (part number: **A06075**).
5. SeaTalk NG to DeviceNet (male) adaptor cables. Connect NMEA 2000 devices that use a DeviceNet connector to the SeaTalk NG backbone, or connect SeaTalk NG devices to an NMEA 2000 network. The following cables are available:
   - SeaTalk NG to DeviceNet (male) adaptor cable 0.1 m (0.33 ft) (part number: **A06078**).
   - SeaTalk NG to DeviceNet (male) adaptor cable 0.4 m (1.3 ft) (part number: **A06074**).
   - SeaTalk NG to DeviceNet (male) adaptor cable 1 m (3.3 ft) (part number: **A06076**).
   - SeaTalk NG to DeviceNet (male) adaptor cable 1.5 m (4.92 ft) (part number: **A06046**).
6. NMEA 0183 stripped-end (2-wire) to SeaTalk NG adapter cable 1 m (3.3 ft) (part number: **A06071**). Used to connect an NMEA 0183 VHF radio to the SeaTalk NG backbone via the NMEA 0183 to SeaTalk NG converter.
7. SeaTalk NG (male) to DeviceNet (female) adaptor (**A06082***).
8. SeaTalk NG (female) to DeviceNet (male) adaptor (**A06083***).
9. SeaTalk NG (male) to DeviceNet (female) elbow (right-angled) adaptor (**A06084***).
10. DeviceNet (female) to stripped-end adaptor cable (0.4 m (1.3 ft)) (part number: **E05026**).
11. DeviceNet (male) to stripped-end adaptor cable (0.4 m (1.3 ft)) (part number: **E05027**).

Important:
* Do NOT connect the A06082, A06083, or A06084 adaptors directly to a backbone. Only connect as part of a **spur** connection between backbone and device.

Appendix A NMEA 2000 PGNs

For a list of supported NMEA 2000 PGNs, please refer to the relevant Operations manual for your display:

Document	Description	Link
81406	LightHouse 4 Operation Instructions	www.bit.ly/LH4-docs
81370	LightHouse 3 Operation Instructions	www.bit.ly/LH3-docs

Appendix B Legacy eS and gS Series compatibility with Axiom displays

As Raymarine continues to develop new features and capabilities for the LightHouse 4 operating system, the ability to downgrade some Axiom-Series models to LightHouse software v3.11.42 (for the purposes of allowing mixed networks of Axiom-Series and legacy eS/gS Series displays) has ended.

Note:
Axiom Pro **displays manufactured after August 2022** can no longer be downgraded to a version of LightHouse which is compatible with mixed systems which include legacy eS and gS Series MFDs/chartplotters.
The following table lists Axiom-Series MFDs/chartplotters and their compatibility status with legacy eS/gS Series MFDs/chartplotters:

Display	Compatibility in mixed systems featuring eS/gS Series displays
Axiom	**Yes** — Software must be downgraded to LightHouse v3.11.42
Axiom+	**No** — NOT compatible with eS/gS systems. The LightHouse OS cannot be downgraded
Axiom XL	**Yes** — Software must be downgraded to LightHouse v3.11.42
Axiom 2 XL	**No** — NOT compatible with eS/gS systems. The LightHouse 4 OS cannot be downgraded
Axiom 2 Pro	**No** — NOT compatible with eS/gS systems. The LightHouse 4 OS cannot be downgraded
Axiom Pro (pre-September 2022)	**Yes** — Software must be downgraded to LightHouse v3.11.42
Axiom Pro (post-September 2022)	**No** — Axiom Pro **displays manufactured after August 2022**, and beginning with the following serial numbers, **are NOT compatible** with mixed systems featuring eS/gS Series displays: • Axiom Pro 9 RVX — E70371-1027106 • Axiom Pro 12 RVX — E70372-0923640 • Axiom Pro 16 RVX — E70373-1127908 • Axiom Pro 9 S — E70481-1026853 • Axiom Pro 12 S — E70482-0924052 • Axiom Pro 16 S — E70483-1026473

If you wish to continue using a mixed system of newer Axiom-Series MFDs/chartplotters and legacy eS/gS Series MFDs/chartplotters, you must ensure that these displays are NOT connected on the same RayNet or SeaTalk NG networks.

Appendix C Ethernet (IPv4) networking of Raymarine devices with third-party products

Raymarine uses a custom Ethernet (IPv4) networking configuration. Use the following information to help you understand how Raymarine's Ethernet (IPv4) implementation interacts with third-party Ethernet (IPv4) devices on your vessel, such as routers, switches, Access Points (APs) etc.

Important:

• Third-party networking products such as routers, switches, and Access Points (APs) *may* work when connected to Raymarine networks, when configured correctly. However, correct operation is not guaranteed. It's important to refer to the instructions provided by the relevant third-party device manufacturer, to ensure that your intended use of a third-party device is consistent with the device's design intent.

• Raymarine does not warrant that Raymarine products are compatible with products manufactured by any person or entity other than Raymarine.

• When using third-party products in your Raymarine electronics network, you should be aware of, and understand, the concepts and limitations described in the following Disclaimer: **p.12 —** Disclaimer

Overview

- Ethernet (IPv4) networking is a method for interconnecting multiple electronic devices, allowing many devices to function in a network and share data using only a single RJ45 or RayNet connection for each device.
- In order to function correctly, every Ethernet (IPv4) device (whether Raymarine or third-party) must have a unique IP address allocated to it, and it must not conflict with that of any other device.
- IPv4 addresses can be centrally-allocated to devices either **automatically**, using a method known as *DHCP* (Dynamic Host Configuration Protocol), or **manually** (i.e. allocated a static IP address). The most common method for allocating IPv4 addresses on vessel electronics networks is *DHCP*. In this configuration, the *server* device is known as a *DHCP server*.

Client / Server device	Example(s)
Raymarine IPv4 DHCP **client**	• Radar scanner (e.g. Quantum-Series) • Sonar module (e.g. CP470) • IP camera (e.g. CAM300)
Raymarine IPv4 DHCP **server** and self-addressing device	• Chartplotter, running LightHouse 3 or LightHouse 4 (e.g. Axiom-Series) • Marine Router (e.g. YachtSense Link)
Third-party IPv4 DHCP **client**	IP camera
Third-party IPv4 DHCP **server**	• Router • Switch • Access Point (AP)

Note:
The DHCP server maintains a pool of IP addresses and "leases" an address to any DHCP-enabled client, when the client device first powers up and announces its presence on the network. Because the IP addresses are dynamic (leased) rather than static (permanently assigned), addresses no longer in use are automatically returned to the DHCP server's pool, for subsequent reallocation.

It's also possible to have multiple DHCP servers issuing addresses on an IPv4 network, but to avoid addressing conflicts, all DHCP servers must be carefully configured to only allocate IP addresses in distinct address ranges. The *subnet mask* must also be carefully configured, to ensure that devices can correctly communicate with one another.

Implementation

- Raymarine Ethernet (IPv4) devices expect to use a private **Raymarine IPv4 network**, which is designed to be internal to the vessel only. Raymarine has carefully chosen a specific IP address range (**198.18.0.0/21**) to ensure that it does not interfere with

any external IP address ranges, or other legacy and real-world addressing constraints (including but not limited to marina Wi-Fi networks).

Note:
Raymarine's IP address range is for **local traffic** within the **vessel's private Raymarine network only**, and does NOT traverse across Raymarine products to external networks, or to the Internet.

- In a Raymarine Ethernet (IPv4) network, IP addresses are self-allocated by certain Raymarine equipment in the following range: **198.18.0.32 to 198.18.3.255** (inclusive). **You must avoid placing any devices in this range using manual (static) IP addresses.**
- Whether your network includes only Raymarine Ethernet (IP) devices, or a mixture of Raymarine and third-party Ethernet (IPv4) devices, you have 3 options for configuring the Ethernet (IPv4) network and managing the IP addresses for your devices:

  1. Use a Raymarine device as the sole DHCP server to allocate IP addresses automatically to all Raymarine and third-party Ethernet (IPv4) devices on the network. **For the purposes of simplicity and reliability, this is the recommended option for most vessels.** The following Raymarine devices can act as DHCP servers:

     a. **Raymarine chartplotter**, running LightHouse 3 or LightHouse 4; or:

     b. **Raymarine YachtSense Link router**

Note:
If both a Raymarine chartplotter **and** YachtSense Link router are present in the same network, the YachtSense Link router MUST be configured as the DHCP server for that network. To facilitate this, the Raymarine chartplotter's DHCP setting defaults to *Automatic* as standard. On power up, if the YachtSense Link router is detected on the Ethernet network, any chartplotters in the network will disable their own *DHCP Server*, to permit the YachtSense Link router to manage the network's IP addresses. Only Raymarine chartplotters running LightHouse 4 are compatible with the YachtSense Link router. Additionally, the most recent versions of the LightHouse 4 and YachtSense Link software must be used.

  2. Use a third-party Ethernet (IPv4) device (such as a router or Access Point) to allocate IP addresses automatically, as a sole *DHCP server*. To do this, refer to the *Configuring a third-party router as DHCP server* section, below.

Note:
Any Raymarine LightHouse 3 or LightHouse 4 chartplotters will still self-allocate their own IP address, even if a third-party DHCP server is being used to allocate IP addresses to other Raymarine or non-Raymarine *DHCP client* devices (Camera, Radar, Sonar etc.) on the network.

  3. Manually configure static IP addresses for your devices. The address range **198.18.0.32 to 198.18.3.255** (inclusive) is used by Raymarine equipment, and any other third-party equipment on the network should not be set to a static IP address in this range. It should instead be set elsewhere in the 198.18.0.0/21 range.

Adding third-party devices to your Raymarine Ethernet (IP) network

- It is recommended that any third-party products connecting to a Raymarine Ethernet (IPv4) network (e.g., a third-party IP camera) are configured as DHCP clients, so that they automatically get allocated a correct IP address within the range used by the **Raymarine IPv4 network**. If this is not possible, (for example, in the scenario that your third-party IP Camera requires a static IP address), you should configure the product to have a static

IP address within the following range: **198.18.0.1 to 198.18.0.31** (inclusive).

- Any third-party router in your network should be performing IPv4 *Network Address Translation* (NAT) from the private address to another one on an upstream interface.

Configuring a third-party router as DHCP server

In the scenario that you wish to use a third-party DHCP server to allocate the IP addresses for your vessel's IPv4 network, use the following information to help you configure the third-party DHCP server to work with Raymarine Ethernet (IPv4) client devices:

1. Configure the third-party DHCP server / router to use Raymarine's subnet details, which are as follows:
   a. Set the DHCP server's IP address to **198.18.0.1**
   b. Set the *netmask* to /21, i.e. **255.255.248.0**
   c. Set the DHCP range from **198.18.4.0 to 198.18.7.254** (inclusive). If this is not possible, ensure that the address range is smaller than this (but within the range of **198.18.4.0 to 198.18.7.254** (inclusive)).
   d. The address range **198.18.0.32 to 198.18.3.255** (inclusive) is used by Raymarine equipment, and therefore you must ensure that any other third-party equipment on the network is NOT set to a static IP address in this range.
2. It may be necessary to set the DHCP setting for **all** of the chartplotters on the vessel to *[Off]*. However, the default option (*[Auto]*) will likely work fine in many cases. If for any reason the third-party DHCP server starts up after the chartplotter starts up, the user should manually set the chartplotter's DHCP switch to *[Off]*. This is because, when the chartplotter starts up, its DHCP *[Auto]* feature tries to detect if another DHCP server is already present on the network.
3. In case of failure of the third-party device, the chartplotters can be easily configured to be the DHCP server again, by setting the chartplotter's DHCP setting back to *[Auto]*.

Adding third-party Wi-Fi Access Points / Wi-Fi routers to your Raymarine Ethernet (IPv4) network

- There is a large volume of multicast IPv4 traffic on the Raymarine Ethernet (IPv4) network. Many consumer Wi-Fi Access Points / Wi-Fi routers simply bridge all multicast traffic from the Ethernet interface to the Wi-Fi interface when there are connected Wi-Fi clients. This will result not only in poor Wi-Fi performance but also in a reduction of usable Wi-Fi spectrum to other Wi-Fi users and vessels in the vicinity. If using a third-party Wi-Fi Access Point or Wi-Fi router, Raymarine recommends that *IGMP Snooping* is enabled on the third-party device, and additional checks are performed, in order to ensure that your device is not bridging any unexpected multicast traffic to its Wi-Fi interface from the Raymarine Ethernet (IPv4) network.
- Raymarine's YachtSense Link router is pre-configured with IGMP Snooping enabled, and therefore does not bridge internal multicast traffic on the wired network to the Wi-Fi network. No additional configuration is required in this respect.

Appendix D Document change history

Document number:	Document name:
87445	Axiom 2 XL Installation Instructions

Changes:

Revision	Date
7	February 2026

- Clarified that sun covers are now available as a spare.
- Minor structural improvements.

Changes:

Revision	Date
6	September 2025

- Added *PSTI Compliance* and *Network interfaces and services* topics.
- Minor structural improvements.

Changes:

Revision	Date
5	July 2025

- Updated sun cover warnings.
- Added details of the LCD screen protective film.
- Updated sun cover cleaning procedure.
- Changed sun covers to be a spare part, rather than an accessory.

Changes:

Revision	Date
4	March 2024

- Updated warnings and cautions to latest.
- Corrected VIDEO 1 and VIDEO 2 labelling throughout.
- Expanded note on video streaming in connection overview, analog and HDMI connection details.
- Added Axiom XL vs Axiom 2 XL video connections details.
- HDMI in and HDMI out connection details updated.
- Updated Off-current descriptions in Power specifications.
- Added IP networking guidance to appendix.
- Added illustrations of accessories and spares.
- Added dimensions for card reader and alarm buzzer.
- Added location requirements for card reader and alarm buzzer.
- Added mounting steps for card reader and alarm buzzer.
- Added Magnetic sun cover warnings.
- Added document change history to appendix.
- Added STV connection details.
- Added Legacy MFD compatibility to appendix.
- Added Network constraints details to Networking connections chapter.
- Added Internet connection details to Network connections chapter.

Changes:

Revision	Date
3	February 2023

- Minor formatting improvements.

Changes:

Revision	Date
2	February 2023

- Initial public release.

Changes:

Revision	Date
1	February 2023

- Initial release, for internal use only.

Index

A

Accessories 19, 106
  Network adapter cables 110
  Network cables 108
  RayNet cables 108
  SeaTalk NG adaptor cables 115
  SeaTalk NG backbone cables 114
  SeaTalk NG cables 112
  SeaTalk NG connectors 114
  SeaTalk NG kits 112
  SeaTalk NG Power cables 114
  SeaTalk NG spur cables 113
Accessory connection 65
Additional components 19
Alarm buzzer 19
Alarm buzzer connection 70
Applicable documents 15
Audio
  Connections (RCA) 68

B

Box contents 23

C

Cable
  Bend radius 43
  Protection 43–44
  Routing 43
  Security 43
  Strain relief 43
Cabling
  Circuit isolation 43
Circuit isolation 43
Cleaning 10, 72
  Screen 72
Compass safe distance 28
Compliance
  Cybersecurity 10
Connecting cables 45
Connections
  Accessory 44, 65
  Alarm 44
  Alarm buzzer 70
  Analog camera 59–60
  Analog video 59–60
  Audio 68
  Bare-ended wires 45
  Battery 49
  Card reader 65
  DeviceNet 53
  Distribution panel 48
  Ethernet 54
  External storage 65
  GPS antenna 70
  GPS Antenna 44
  Ground 44
  HDMI 44
  HDMI IN 60–61, 64
  HDMI out 64
  HDMI OUT 61
  Internet 56–57
  Network 54
  Network connections 55
  NMEA 2000 ..... 44, 53
  Optional grounding 50
  Overview 44
  PoE 56
  Power 44, 47
  Power over Ethernet (PoE) 55
  RayNet 44, 55
  Rear connectors 44
  RNS-5 54
  SeaTalk NG 53
  STV 61
  Touch 44
  Touch control in 64
  Touch control out 64
  USB 44
  USB (via RCR-SDUSB) 65
  Video 44
  Video 1 60

Video 2 59
Wi-Fi 57
Wire 45
Cybersecurity 10

D

Declaration of Conformity 10
Dedicated grounding 50
Diagnostics 87
Dimensions
Alarm buzzer 26
Card reader 26
Display 25
Document history 122
Documentation 15

E

e-Label 10
Electromagnetic Compatibility 31
EMC, *See* Electromagnetic Compatibility
eS Series 118
Ethernet 119
Ethernet connection 54
External storage 65

F

Factory reset 77
Flush mount 35
Flush mounting 37
Fuse rating 47

G

Gasket tape 37
GNSS antenna 19
GNSS antenna connection 70
GPS antenna connection 70
gS Series 118

H

HDMI 18
HDMI IN
Resolutions 60
HDMI IN connection 64
HDMI OUT
Resolutions 61
HDMI out connection 64

I

Installation 36–37
Alarm buzzer 41
Best practice 49
Card reader 40
Display 35
Flush mount 39
Mounting options 35
Surface mount 35, 39
Interference 28
See also Compass safe distance
RF 32
Internet connection 56–57
IP address 87
IP networking 119

L

LightHouse
Downgrade 118
Location requirements 29
Display viewing angle 31
General 28, 32
GNSS 29
GPS 29
Touchscreen 30
Wireless 30
Wireless interference 31

M

Maintenance 10, 72

MFD kit 19
Mounting
  Alarm buzzer 41
  Card reader 40

N

Network
  cables 110
Network connection 54
Networking (IP)
  Overview 119
NMEA 0183 convertor 19
NMEA 2000 117
  PGN list 117
NMEA 2000 connection 53

O

Operation 117
Operation instructions 16

P

Parts supplied 23
PoE connection 56
PoE device class 55
Power
  Battery connection 49
  Connection to battery 49
  Connection to distribution panel 48
  Distribution 48
  Distribution panel 48
  Grounding 49
  Sharing a breaker 48–49
Power connection 47
Power over Ethernet (PoE) 18, 55
Power troubleshooting 77
Product documentation 15
Product information 87
Product overview 18
Product recycling (WEEE) 12
Product support 86
Protective film 40

R

Radio Frequency (RF) interference 32
RayNet 119
  cables 108, 110
RayNet cable 55
RayNet connection 54
RCR-SD/USB 19
Recovery mode 77
Regulatory standards 10
RJ45
  cables 110
Routine checks 72

S

SeaTalk NG
  Adaptor cables 115
  Backbone cables 114
  Connectors 114
  Kits 112
  Power cables 114
  Spur cables 113
SeaTalk NG cables 112
SeaTalk NG connection 53
SeaTalkhs
  cables 110
Service Center 86
Servicing 10, 72
Software updates 31
Spares 107
Sun covers 72
Support forum 88
Suppression ferrite 55
Suppression ferrites 66
Surface mounting 36
Surface temperature 29
System examples 19

T

Technical specification
- Approvals 92, 96, 100, 104
- Compliance 92, 96, 100, 104
- Connections specification 91, 95, 99, 103
- Environmental specification 90, 94, 98, 102
- Internal GNSS receiver specification 92, 96, 100, 104
- LCD specification 90, 94, 98, 102
- Physical specification 91, 95, 99, 103
- Power specification 90, 94, 98, 102
- Product markings 10

Technical support 86, 88
Tools 35
Tools required 35
Touch control 18
Touch in connection 64
Touch out connection 64
Training courses 88
Troubleshooting 75, 79, 81, 84
- GNSS 78
- GPS 78
- Miscellaneous 75
- Power 77
- Sonar 79
- Touchscreen 84
- Wi-Fi 81

Typical system 19

V

Ventilation 28
Video connection 59–60
Video connections
- Network stream 59

W

Warranty 12, 86
WEEE Directive 12
What's in the box 23
Wi-Fi
- Settings 57

Y

YachtSense Link
- IP address conflict 57
- Network connection 57