Raymarine®

p70s / p70Rs

Installation Instructions

Document number: 87424 (Rev 3) | English (en-US) | Date: 10-2025

Legal notices

Trademark and patents notice

Raymarine®, **Tacktick®**, **Pathfinder®**, **Clear Pulse®**, **Truzoom®**, **SeaTalk®** , **SeaTalk HS™**, **SeaTalk NG™**, and **MicroNet™**, are registered or claimed trademarks of Raymarine UK Ltd.
FLIR®, **Fishidy®**, **Fishing Hot Spots®**, **YachtSense™** , **DockSense®**, **RangeFusion™**, **DownVision®** , **SideVision®**, **RealVision®**, **HyperVision™**, **Wi-Fish®**, **Dragonfly®**, **Element®**, **Quantum®**, **Cyclone™**, **Alpha™**, **Axiom®**, **Infrared Everywhere**, **The World's Sixth Sense** and **ClearCruise®** are registered or claimed trademarks of Teledyne FLIR LLC.
All other trademarks, trade names, or company names referenced herein are used for identification only and are the property of their respective owners.
This product is protected by patents, design patents, patents pending, or design patents pending.

Fair Use Statement

You may print no more than three copies of this manual for your own use. You may not make any further copies or distribute or use the manual in any other way including without limitation exploiting the manual commercially or giving or selling copies to third parties.

Content notice

Please ensure that you have obtained this document only from Raymarine, and that it is the **latest** available version.
There are numerous third-party Internet websites (such as *www.manualslib.com*) hosting Raymarine product manuals. These websites are not authorized by Raymarine to do so, and are often hosting illegitimate or older versions of Raymarine product manuals, which may contain inaccurate or misleading information.
To obtain the latest official documentation for a Raymarine product, please visit the official Raymarine website: www.docs.raymarine.com

Artificial Intelligence (AI) content notice

There are numerous third-party **Artificial Intelligence** (AI) services available to the public, which are capable of providing a summary or transcription of the information provided by official Raymarine publications or websites, either in written or audio/video formats. These services may alter, supplement, or convey the original information provided by Raymarine in inaccurate or misleading ways.
Please ensure that you have obtained this document only from Raymarine, and that it is the **latest** available version.

English (en-US)
Document number: 87424 (Rev 3)

CONTENTS

CHAPTER 1 IMPORTANT INFORMATION 7
Safety warnings 7
Product warnings 8
TFT Displays 8
Regulatory notices 8
Water ingress 8
Disclaimer 8
Declaration of Conformity 8
PSTI Compliance 9
Product disposal 9
Warranty policy and registration 9
IMO and SOLAS 9
Technical accuracy 9
Publication copyright 9

CHAPTER 2 DOCUMENT INFORMATION 10
2.1 Product documentation 11
2.2 Commissioning and Operation Instructions 11
2.3 Document illustrations 11

CHAPTER 3 PRODUCT AND SYSTEM OVERVIEW 12
3.1 Product overview 13
3.2 Compatible autopilot systems 13
3.3 Software updates 13
Checking hardware and software information 13
Performing software updates 14

CHAPTER 4 PARTS SUPPLIED 15
4.1 Parts supplied 16

CHAPTER 5 PRODUCT DIMENSIONS 17
5.1 Product dimensions 18

CHAPTER 6 LOCATION REQUIREMENTS 19
6.1 Selecting a location 20
Warnings and cautions 20
General location requirements 20
EMC installation guidelines 20

CHAPTER 7 MOUNTING 22
7.1 Tools 23
7.2 Bezel removal 23
Removing the bezel 23
7.3 Removing the keypad 23
7.4 Mounting 24
Pre-mounting check 24
Mounting 24
7.5 Fitting the keypad 25

CHAPTER 8 CONNECTIONS 26
8.1 General cabling guidance 27
Cable types and length 27
Cable routing and bend radius 27
Strain relief 27
Cable shielding 27
8.2 Connections overview 28
Connecting SeaTalk NG cables 28

8.3 Cable ferrite installation....28

CHAPTER 9 NETWORK CONNECTIONS 29

9.1 SeaTalk NG connection....30

SeaTalk NG cables 31

9.2 SeaTalk 1 connection....31

9.3 NMEA 2000 connection 31

CHAPTER 10 POWER CONNECTIONS 32

10.1 SeaTalk NG power supply 33

Inline fuse requirement....33

Inline fuse and thermal breaker ratings....33

10.2 12 Volt dc only 34

10.3 SeaTalk NG power cables 34

10.4 SeaTalk NG power cable extension....34

10.5 SeaTalk NG product loading 35

10.6 SeaTalk NG power connection point....35

10.7 SeaTalk NG system loading....35

10.8 Power distribution — SeaTalk NG 36

10.9 Power connection via Autopilot Control Unit (ACU-Series)....38

CHAPTER 11 COMMISSIONING 39

11.1 Commissioning and Operation Instructions 40

CHAPTER 12 OPERATION.... 41

12.1 Controls 42

12.2 Commissioning and Operation Instructions 43

CHAPTER 13 MAINTENANCE.... 44

13.1 Routine equipment checks....45

13.2 Product cleaning....45

13.3 Cleaning the display screen....45

13.4 Cleaning the display case....45

13.5 Cleaning the sun cover....45

CHAPTER 14 SYSTEM CHECKS AND TROUBLESHOOTING 46

14.1 Troubleshooting 47

14.2 Power up troubleshooting 47

Performing a Factory Reset....48

14.3 System data troubleshooting....48

14.4 Miscellaneous troubleshooting 49

CHAPTER 15 TECHNICAL SPECIFICATION 50

15.1 Technical specification....51

CHAPTER 16 TECHNICAL SUPPORT 52

16.1 Raymarine technical support and servicing 53

Checking hardware and software information 54

16.2 Learning resources 54

CHAPTER 17 SPARES AND ACCESSORIES.... 55

17.1 Spares and Accessories....56

17.2 SeaTalk NG cables and accessories 56

APPENDIX A SUPPORTED NMEA 2000 PGN LIST 61

APPENDIX B DOCUMENT CHANGE HISTORY 62

CHAPTER 1: IMPORTANT INFORMATION

Safety warnings

Warning: Autopilot installation

Correct performance of the vessel's steering is critical for safety, therefore it is STRONGLY RECOMMENDED that this product is installed by an Authorized Raymarine Service Representative. You will only receive full warranty benefits if you can show that an Authorized Raymarine Service Representative has installed and commissioned your autopilot system.

Warning: Product installation and operation

• This product must be installed and operated in accordance with the instructions provided. Failure to do so could result in personal injury or damage to your vessel. It may also cause poor product performance or invalidate the product warranty.

• Raymarine highly recommends certified installation by a Raymarine approved installer. A certified installation qualifies for enhanced product warranty benefits. Register your warranty on the Raymarine website: www.raymarine.com/warranty

Warning: Aid to navigation

This product is intended only as an aid to navigation and must never be used in preference to sound navigational judgment. It is the user's responsibility to use official government charts, notices to mariners, caution and proper navigational skill when operating this or any other Raymarine product.

Warning: Maintain a permanent watch

Always maintain a permanent watch, this will allow you to respond to situations as they develop. Failure to maintain a permanent watch puts yourself, your vessel and others at serious risk of harm.

Warning: Potential ignition source

This product is NOT approved for use in hazardous/flammable atmospheres. Do NOT install in a hazardous/flammable atmosphere (such as in an engine room or near fuel tanks).

Warning: Switch off power supply

Ensure that the vessel's power supply is switched OFF before starting to install this product. Do NOT connect or disconnect equipment with the power switched on, unless instructed to do so in this document.

Warning: Power supply voltage

Connecting this product to a voltage supply greater than the specified maximum rating may cause permanent damage to the unit. For the correct voltage, refer to the information label affixed to the product.

Caution: Power supply protection

When installing this product, ensure that the power source is adequately protected by means of a suitably-rated fuse or thermal circuit breaker.

Product warnings

Caution: Sun covers

• Sun covers are used to protect the display screen against the damaging effects of ultraviolet (UV) light. If your product is supplied with a sun cover always ensure it is fitted when the product is not in use.

• To avoid potential loss of the sun cover, ensure that the sun cover is removed when travelling at high speed, whether in the water or when the vessel is being towed.

• To avoid potential screen damage, ensure that the rear surface of the sun cover and the display screen are clean and free from debris before placing the sun cover on the screen.

TFT Displays

The colors of the display may seem to vary when viewed against a colored background or in colored light. This is a perfectly normal effect that can be seen with all color Thin Film Transistor (TFT) displays.

Regulatory notices

Water ingress

Water ingress disclaimer

Although the waterproof rating capacity of this product meets the stated water ingress protection standard (refer to the product's *Technical Specification*), water intrusion and subsequent equipment failure may occur if the product is not installed correctly or subjected to high-pressure washing. Raymarine will not warrant products subjected to high-pressure washing.

Disclaimer

Raymarine does not warrant that this product is error-free or that it is compatible with products manufactured by any person or entity other than Raymarine.

Raymarine is not responsible for damages or injuries caused by your use or inability to use the product, by the interaction of the product with products manufactured by others, or by errors in information utilized by the product supplied by third parties.

Third-party hardware, such as converters, adapters, routers, switches, Access Points etc., provided by third parties, may be made available directly to you by other companies or individuals under separate terms and conditions, including separate fees and charges. Raymarine UK Ltd or its affiliates have not tested or screened the third-party hardware.

Raymarine has no control over, and is not responsible for:

- (a) the content and operation of such third-party hardware; or:
- (b) the privacy or other practices of such third-party hardware.

The fact that Raymarine's documentation may make reference to such third-party hardware does not indicate any approval or endorsement of any such third-party hardware. Raymarine may reference such third-party hardware only as a convenience.

THIS INFORMATION IS MADE AVAILABLE BY Raymarine ON THE BASIS THAT YOU EXCLUDE TO THE FULLEST EXTENT LAWFULLY PERMITTED ALL LIABILITY WHATSOEVER FOR ANY LOSS OR DAMAGE HOWSOEVER ARISING OUT OF THE USE OF THIS INFORMATION OR RELIANCE UPON THIS INFORMATION.

Raymarine does not exclude **Raymarine**'s liability (if any) to you for personal injury or death resulting from **Raymarine UK Ltd** negligence, for fraud or for any matter which it would be illegal to exclude or to attempt to exclude.

Declaration of Conformity

Raymarine UK Ltd declares that the product listed below is in conformity with the relevant sections of the listed designated standards and / or other normative documents:

- p70s pilot controller, part number E70328
- p70Rs pilot controller, part number E70329

Region	Standard	Mark
UK	EMC Regulations 2016	UK CA
EU	Radio Equipment Directive 2014/30/EU	CE

The original Declaration of Conformity certificates may be obtained via the documentation page at www.bit.ly/p70s-docs

PSTI Compliance

For products sold into the United Kingdom (UK), use the following link to obtain the product's Statement of Compliance with the *Product Security and Telecommunications Infrastructure* (PSTI) Regulations:

Visit the following web address and enter the product's model name or number (SKU) into the provided search field:

- www.bit.ly/rym-sec-com

Product disposal

Dispose of this product in accordance with the WEEE Directive.

The Waste Electrical and Electronic Equipment (WEEE) Directive requires the recycling of waste electrical and electronic equipment which contains materials, components and substances that may be hazardous and present a risk to human health and the environment when WEEE is not handled correctly.

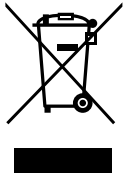

Equipment marked with the crossed-out wheeled bin symbol indicates that the equipment should not be disposed of in unsorted household waste. Local authorities in many regions have established collection schemes under which residents can dispose of waste electrical and electronic equipment at a recycling center or other collection point. For more information about suitable collection points for waste electrical and electronic equipment in your region, refer to the Raymarine website: https://bit.ly/rym-recycling

Warranty policy and registration

Visit the Raymarine website to **read the latest warranty policy**, and **register** your product's warranty online: www.bit.ly/rym-warranty

It is important that you register your product to receive full warranty benefits. Your product package includes a barcode label indicating the serial number of the unit. This serial number is also provided on a label affixed to the product itself. You will need this serial number when registering your product online.

IMO and SOLAS

The equipment described within this document is intended for use on leisure marine boats and workboats NOT covered by International Maritime Organization (IMO) and Safety of Life at Sea (SOLAS) Carriage Regulations.

Technical accuracy

To the best of our knowledge, the information in this document was correct at the time it was produced. However, Raymarine cannot accept liability for any inaccuracies or omissions it may contain. In addition, our policy of continuous product improvement may change specifications without notice. As a result, Raymarine cannot accept liability for any differences between the product and this document. Please check the Raymarine website to ensure you have the most up-to-date version(s) of the documentation for your product: www.docs.raymarine.com

Publication copyright

Copyright ©2025 Raymarine UK Ltd. All rights reserved. No parts of this material may be copied, translated, or transmitted (in any medium) without the prior written permission of Raymarine UK Ltd.

CHAPTER 2: DOCUMENT INFORMATION

CHAPTER CONTENTS

- 2.1 Product documentation — page 11
- 2.2 Commissioning and Operation Instructions — page 11
- 2.3 Document illustrations — page 11

2.1 Product documentation

The following documentation is applicable to your product:

Applicable documents

Document	Description	Link
87424	p70s / p70R Pilot Controller Installation Instructions (this document)	www.bit.ly/p70s-docs
87260	p70s / p70Rs Mounting template.	www.bit.ly/p70s-docs
81402	p70 / p70R / p70s / p70Rs Commissioning and Operation Instructions .	www.bit.ly/p70s-docs

2.2 Commissioning and Operation Instructions

For detailed information related to the Commissioning and Operation of your autopilot system using the p70s / p70Rs, refer to the *Commissioning and Operation Instructions* document.

Document	Number	Link
p70s / p70Rs *Commissioning and Operation Instructions*	81402	www.bit.ly/p70s-docs

2.3 Document illustrations

Your product and if applicable, its user interface may differ slightly from that shown in the illustrations in this document, depending on product variant and date of manufacture.

All images are provided for illustration purposes only.

CHAPTER 3: PRODUCT AND SYSTEM OVERVIEW

CHAPTER CONTENTS

- 3.1 Product overview — page 13
- 3.2 Compatible autopilot systems — page 13
- 3.3 Software updates — page 13

3.1 Product overview

The p70s and p70Rs are pilot controllers for SeaTalk NG, NMEA 2000, and SeaTalk 1 autopilot systems.

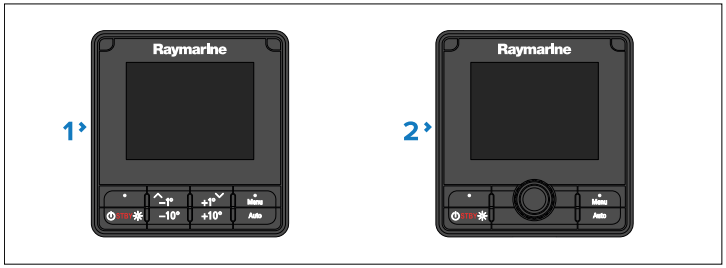

1. **p70s** (E70328) — 8 button pilot controller (for sailing vessels).
2. **p70Rs** (E70329) — Rotary pilot controller (for power vessels).

The pilot controllers includes the following features:

- All-weather optically-bonded 3.45” high brightness color display with wide viewing angles.
- Large clear characters for easy reading in any conditions.
- Compatible with SeaTalk NG, NMEA 2000, and SeaTalk 1 autopilot systems.
- Intuitive operating system.
- 12 V dc operation.
- Low power consumption.
- Waterproof to IPx6 and IPx7.

3.2 Compatible autopilot systems

Your product is compatible with the following autopilot systems:

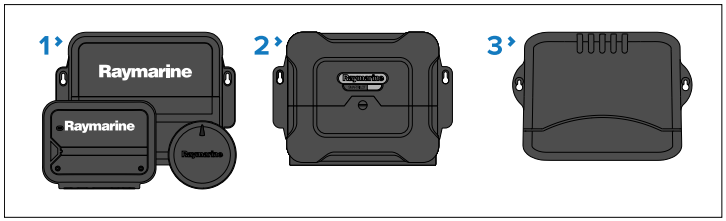

1. Evolution autopilots (Connects via SeaTalk NG).
2. SPX SmartPilot (Connects via SeaTalk NG).
3. S1, S2 & S3 SmartPilot (Connects via SeaTalk 1 to SeaTalk NG adapter cable (Part number: A06047).

3.3 Software updates

Raymarine regularly issues software updates for its products, which provide new and enhanced features and improved performance and usability. It’s important to ensure that you have the latest software for your products by regularly checking the Raymarine website for new software releases.

To check for the latest software updates and the software update procedure for your specific product(s), refer to: www.bit.ly/rym-software

Unless otherwise stated, software updates for Raymarine products are performed using a Raymarine MFD / chartplotter.

- Where applicable, you should always backup your user data and settings before performing a software update.
- To update SeaTalk NG products, you must use the datamaster MFD / chartplotter which is physically connected to the SeaTalk NG backbone.
- Ethernet (RayNet) products can be updated from any MFD / chartplotter on the same network as the product to be updated.
- In order to perform a software update, any connected Autopilot or Radar must be switched to Standby.
- The MFD / chartplotter “Check online” feature is only available when connected to the Internet.

Note:
If in doubt as to the correct procedure for updating your product software, refer to your dealer or Raymarine technical support.

Checking hardware and software information

You can check current hardware details and software version from the *[About display]* menu.

1. Press the *[Menu]* button.
2. Select *[Set-up]*.
3. Select *[Diagnostics]*.

4. Select *[About Display]*.

   A range of information is displayed, including the *software version* and *Serial number*.

5. Use the *[Up]* and *[Down]* buttons to cycle through the information.

> **Caution: Installing software updates**
>
> • The software update process is carried out at your own risk. Before initiating the update process ensure you have backed up any important files.
>
> • Ensure that the product(s) has a reliable power supply and that the update process is not interrupted.
>
> • Damage caused by an incomplete update is not covered by Raymarine warranty.
>
> • By downloading the software update package, you agree to these terms.

Performing software updates

Software updates for this product are performed from a Raymarine MFD / Chartplotter.

For instructions on how to update product software, refer to the *software update* instructions included in the *Operation instructions* for your MFD / Chartplotter:

MFD / Chartplotter software	Document	Link
LightHouse 2	Operation Instructions (**81360**)	www.bit.ly/LH2-docs
LightHouse 3	Advanced Operation Instructions (**81370**)	www.bit.ly/LH3-docs
LightHouse 4	Advanced Operation Instructions (**81406**)	www.bit.ly/LH4-docs
LightHouse Sport (Element)	Operation Instructions (**81388**)	www.bit.ly/element-docs

CHAPTER 4: PARTS SUPPLIED

CHAPTER CONTENTS

- 4.1 Parts supplied — page 16

4.1 Parts supplied

The following parts are supplied in the box.

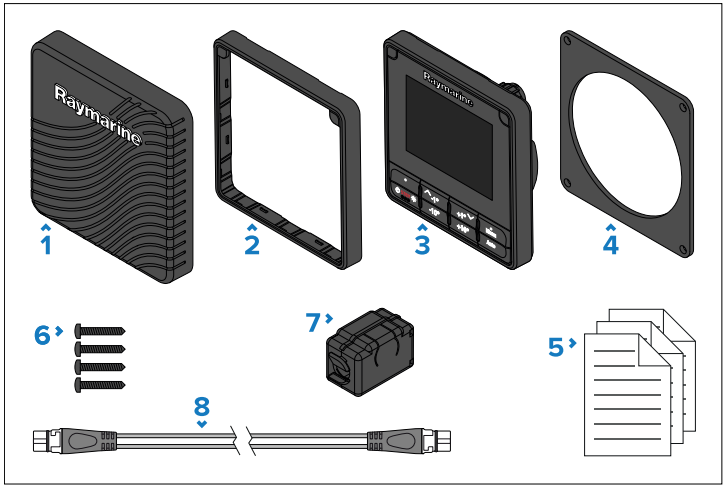

1. Suncover
2. Gunmetal bezel
3. p70s or p70Rs (p70s shown), supplied with keypad and black bezel fitted.
4. Panel seal gasket.
5. Documentation pack.
6. Suppression ferrite.
7. Mounting fixings x 4 (M3x16 panhead pozi screws).
8. 400 mm (15.7 in) SeaTalk NG spur cable.

CHAPTER 5: PRODUCT DIMENSIONS

CHAPTER CONTENTS

- 5.1 Product dimensions — page 18

5.1 Product dimensions

The dimensions below must be considered when choosing a location for your product.

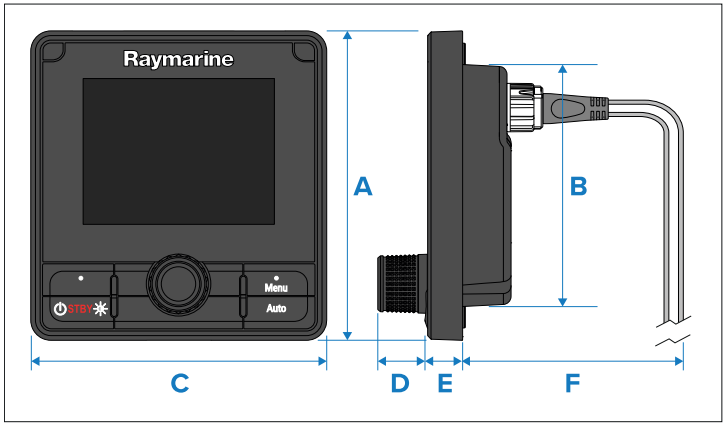

- **A:** 115 mm (4.53 in)
- **B:** 90 mm (3.54 in)
- **C:** 110 mm (4.33 in)
- **D: (p70Rs only)** 17.8 mm (0.7 in)
- **E:** 14.05 mm (0.55 in)
- **F:** 119.8 mm (4.72 in)

CHAPTER 6: LOCATION REQUIREMENTS

CHAPTER CONTENTS

- 6.1 Selecting a location — page 20

6.1 Selecting a location

Warnings and cautions

Important:
Before proceeding, ensure that you have read and understood the warnings and cautions provided in the following section of this document:

- **p.7 — Important information**

General location requirements

Below are important requirements that need to be considered when choosing a suitable location to install your product.

The product is suitable for mounting above or below decks.

The product should be mounted in a location where it will be:

- Protected from physical damage and excessive vibration.
- Well ventilated and away from heat sources.
- Away from any potential ignition source such as an engine room, near fuel tanks or a gas locker.
- Easily accessible for operations.

When choosing a location for the product, consider the following to ensure reliable and trouble-free operation:

- Access — there must be sufficient space to enable cable connections and to avoid tight cable bends.
- Electrical interference — the product should be mounted far enough away from any equipment that may cause interference such as engines, motors, generators, radio transmitters / receivers and cables carrying high power.
- Magnetic compass — refer to the *Compass safe distance* section in this document for advice on maintaining a suitable distance between this product and any compasses on your vessel.
- Mounting surface — ensure the product is adequately supported on a secure surface. Refer to the weight information provided in the *Technical specification* for this product and ensure that the intended mounting surface is suitable for bearing the product weight. Do NOT mount units or cut holes in places which may damage the structure of the vessel.

Site requirements

When selecting a suitable location, ensure that the following requirements are adhered to:

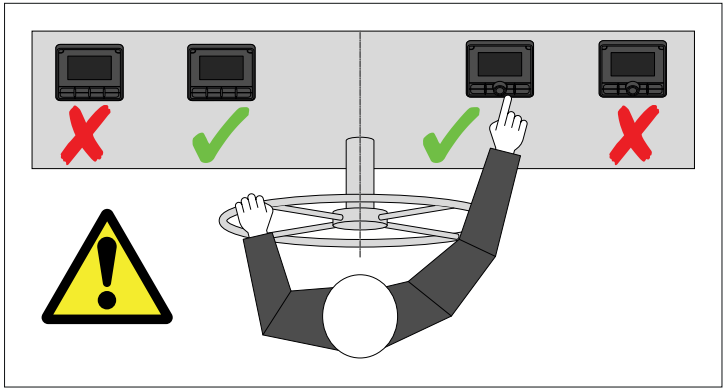

- There must be no obstacles between the user and the pilot controller.
- The pilot controller must be located within easy reach of the usual seated helm position.

Viewing angle considerations

As display contrast and color are affected by the viewing angle, before choosing the mounting position of your display, it is recommended that you temporarily power up the display (prior to installation) and experiment with different installation locations, to enable you to best judge which location provides the optimum viewing angle for your specific installation.

For viewing angles for your product, refer to the *Technical specification*.

EMC installation guidelines

Raymarine equipment and accessories conform to the appropriate Electromagnetic Compatibility (EMC) regulations, to minimize electromagnetic interference between equipment and minimize the effect such interference could have on the performance of your system.

Correct installation is required to ensure that EMC performance is not compromised.

Note:
In areas of extreme EMC interference, some slight interference may be noticed on the product. Where this occurs the product and the source of the interference should be separated by a greater distance.

For **optimum** EMC performance we recommend that wherever possible:

- Raymarine equipment and cables connected to it are:
  - At least 1 m (3.28 ft) from any equipment transmitting or cables carrying radio signals e.g. VHF radios, cables and antennas. In the case of SSB radios, the distance should be increased to 2 m (6.6 ft).
  - More than 2 m (6.56 ft) from the path of a radar beam. A radar beam can normally be assumed to spread 20 degrees above and below the radiating element.
- The product is supplied from a separate battery from that used for engine start. This is important to prevent erratic behavior and data loss which can occur if the engine start does not have a separate battery.
- Raymarine specified cables are used.
- Cables are not cut or extended, unless doing so is detailed in the installation manual.

Note:
Where constraints on the installation prevent any of the above recommendations, always ensure the maximum possible separation between different items of electrical equipment, to provide the best conditions for EMC performance throughout the installation.

RF interference

Certain third-party external electrical equipment can cause Radio Frequency (RF) interference with GNSS (GPS), AIS or VHF devices, if the external equipment is not adequately insulated and emits excessive levels of electromagnetic interference (EMI).

Some common examples of such external equipment include LED lighting (e.g.: navigation lights, searchlights and floodlights, interior and exterior lights) and terrestrial TV tuners.

To minimize interference from such equipment:

- Keep it as far away from GNSS (GPS), AIS or VHF products and their antennas as possible.
- Ensure that any power cables for external equipment are not entangled with the power or data cables for these devices.
- Consider fitting one or more high frequency suppression ferrites to the EMI-emitting device. The ferrite(s) should be rated to be effective in the range 100 MHz to 2.5 GHz, and should be fitted to the power cable and any other cables exiting the EMI-emitting device, as close as possible to the position where the cable exits the device.

CHAPTER 7: MOUNTING

CHAPTER CONTENTS

- 7.1 Tools — page 23
- 7.2 Bezel removal — page 23
- 7.3 Removing the keypad — page 23
- 7.4 Mounting — page 24
- 7.5 Fitting the keypad — page 25

7.1 Tools

The following tools are required when installing your product.

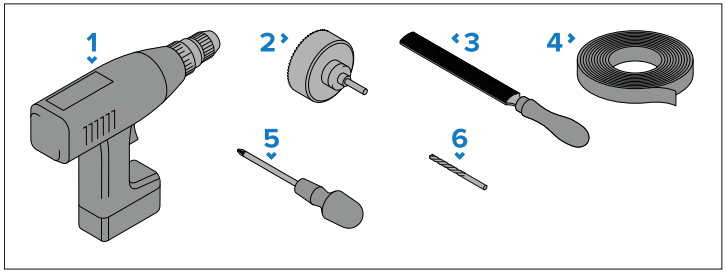

1. Power drill
2. 92 mm (3 5/8”) hole cutter
3. File
4. Adhesive tape
5. Pozi drive screwdriver
6. Drill bit of appropriate size (1)

Note:
(1) Drill bit size is dependent on the thickness and type of material that the unit is to be mounted on.

7.2 Bezel removal

Prior to mounting the unit the bezel must be removed.

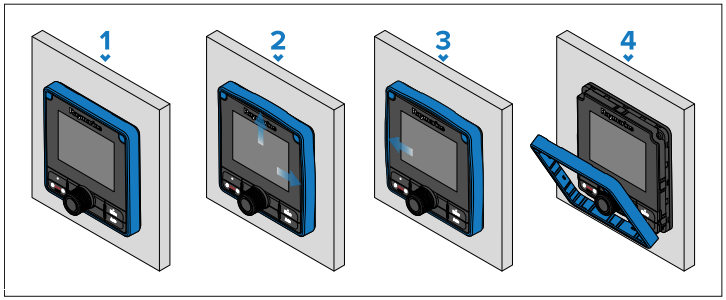

Removing the bezel

Instructions for removing the display’s bezel.

Note:
Take care when removing the bezel. Only use a plastic pry tool (not supplied) to lever the bezel; attempting to use a metal tool may cause damage to the unit.

1. Using a plastic pry tool and your fingers, pry the bezel away from the display at the top and on one side of the display.

   You should hear a click as each side of the bezel is released.
2. Pry the bezel away from the display on the opposite side.
3. The entire bezel can now be pulled away from the display.

7.3 Removing the keypad

Prior to mounting the unit the keypad must be removed.

Note:
Take care not to bend the keypad as this may prevent the keypad from fitting correctly.

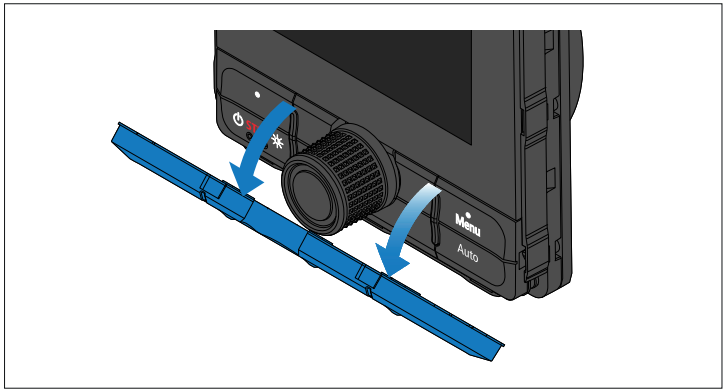

1. Remove the bezel.

2. Using your fingers, grip the top edge of the keypad and pull it down and away from the unit.

7.4 Mounting

Pre-mounting check

The product is designed to be surface mounted. Before mounting the unit, ensure you have:

- Selected a suitable location.
- Identified the cable connections and route that the cables will take.
- Detached the bezel.
- Remove the buttonpad.

Mounting

Follow the instructions below to mount the display.

Before mounting the product, ensure that you have:

- Selected a suitable location, based on the location requirements found in this document. For more information, refer to: **p.19 — Location requirements**
- Identified the relevant cable connections and the route that the cables will take.
- Removed the bezel and button pad from the display.

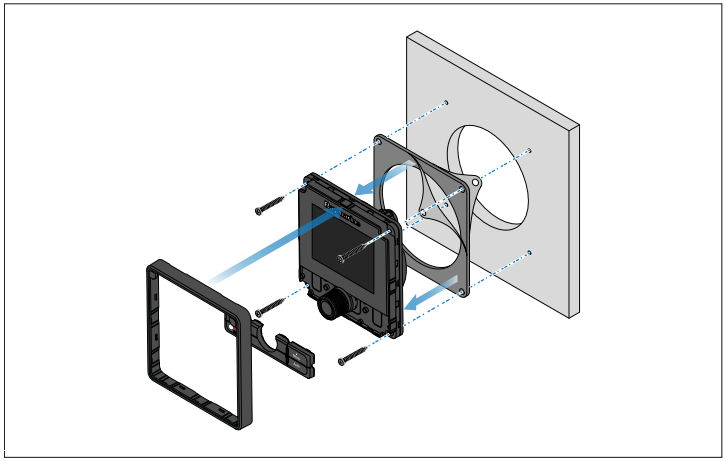

1. Apply the supplied mounting template to the selected location, using self adhesive tape.
2. Drill the cut-out hole using a 92 mm (3 5/8”) hole cutter.

   Alternatively, use a small drill bit to make pilot holes in each corner of the cut-out area, and then use a jigsaw to cut along the inside edge of the cut-out line.
3. Ensure that the display fits into the removed area.
4. File around any rough edges.
5. Drill the fixing holes as indicated on the mounting template.
6. Peel the backing off of the panel mounting gasket, place the adhesive side of the gasket onto the back of the display, and then press firmly onto the flange.
7. Connect the SeaTalk NG cable.
8. Position the display in place and secure using the fixings provided.
9. Re-fit the button pad and bezel.

Note:

• Drill bit, tap size, and tightening torques are dependant upon the material type and thickness of the mounting surface.

• The supplied gasket provides a seal between the unit and a suitably flat and stiff mounting surface or binnacle. The gasket should be used in all installations. If the mounting surface or binnacle is not entirely flat and stiff or has a rough surface finish, it may also be necessary to use a marine-grade sealant.

7.5 Fitting the keypad

The keypad is held in place by tabs located on the top and bottom edge of the keypad. To fit the keypad correctly all of the tabs must be engaged.

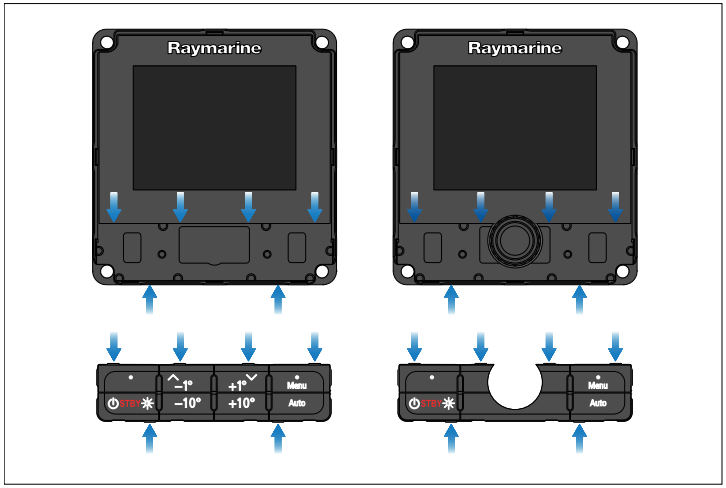

1. Tilt the top edge of the keypad forwards and insert the bottom edge into the unit, ensuring the tabs line up with their respective slots.

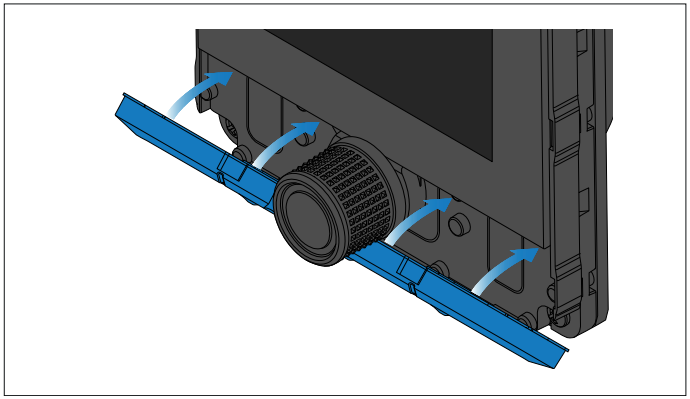

2. Push the top edge of the keypad into the unit.
3. Using your fingers, apply pressure at each tab location, ensuring that the keypad tabs are fully engaged.
4. Fit the bezel.

CHAPTER 8: CONNECTIONS

CHAPTER CONTENTS

- 8.1 General cabling guidance — page 27
- 8.2 Connections overview — page 28
- 8.3 Cable ferrite installation — page 28

8.1 General cabling guidance

Cable types and length

It is important to use cables of the appropriate type and length.

- Unless otherwise stated only use cables supplied by Raymarine.
- Where it is necessary to use non-Raymarine cables, ensure that they are of correct quality and gauge for their intended purpose. (e.g.: longer power cable runs may require larger wire gauges to minimize voltage drop along the run).

Cable routing and bend radius

To maximize cable performance and lifespan, it's important to ensure that all cables are routed correctly and adequate space is provided to allow for each cable's minimum bend radius.

Minimum cable bend radius

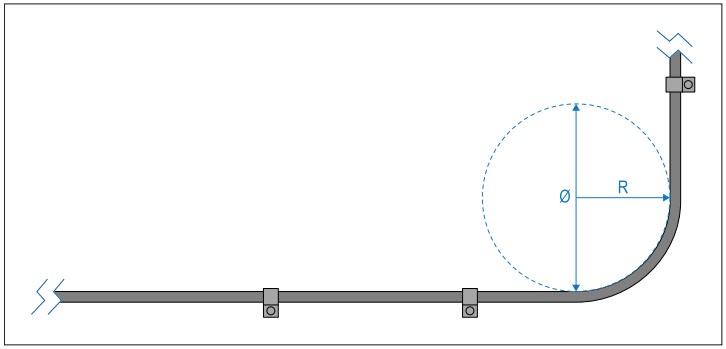

Do NOT bend cables excessively. Wherever possible, ensure that your chosen product installation location allows enough clearance for the minimum cable bend diameter specified in the following table:

	Description	Value
Ø	Cable minimum bend **diameter**.	200 mm (7.87 in.)
R	Cable minimum bend **radius**.	100 mm (3.94 in.)

Note:
For products where multiple different cable types are connected, each with a different minimum cable bend radius, the higher figure is provided in the table above (i.e. the cable with the greatest minimum bend radius is specified).

Cable routing — best practices

- Protect all cables from physical damage and exposure to heat. Use trunking or conduit where possible. Do NOT run cables through bilges or doorways, or close to moving or hot objects.
- Secure cables in place using cable clips or cable ties. Coil any excess cable and tie it out of the way.
- Where a cable passes through an exposed bulkhead or deckhead, use a suitable watertight feed-through (conduit).
- Do NOT run cables near to engines or fluorescent lights.
- Always route data cables as far away as possible from:
  - Other equipment and cables.
  - High current-carrying AC and DC power lines.
  - Antennas.

Caution: Pulling cables

Do NOT use cords or ropes, attached to cable connectors, to pull cables through restricted apertures (e.g. as in bulkheads), as this could cause damage to cables.

Strain relief

Use adequate strain relief for cabling to ensure that connectors are protected from strain and will not pull out under extreme sea conditions.

Cable shielding

Ensure that cable shielding is not damaged during installation and that all cables are properly shielded.

Important:
Be aware that some **third-party** cables and adapters (for example, certain Ethernet cables using RJ45 connectors) are not always shielded. To prevent breaks in cable shielding continuity and potential grounding issues, special attention is required to ensure that any cables, extension cables, adapters, or other signal-coupling devices used in cable runs **maintain all shield connections throughout the cable run**.

8.2 Connections overview

Your product is supplied power and data using the SeaTalk NG connector located on the rear of the unit.

Connector	Connection options
	• SeaTalk NG backbone using a SeaTalk NG spur cable. • NMEA 2000 backbone using SeaTalk NG to DeviceNet adaptor cable (A06045) • SeaTalk 1 backbone using a SeaTalk 1 to SeaTalk NG adaptor cable (A06073)

For a list of available cables, refer to: **p.55 — Spares and accessories**

Connecting SeaTalk NG cables

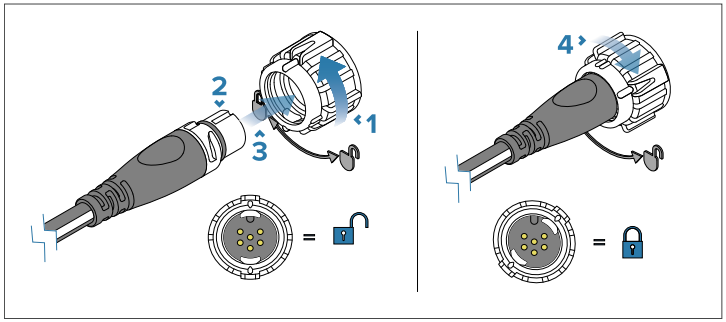

1. Rotate your product's SeaTalk NG connector locking collar counter clockwise, so that the connector is in the unlocked position.
2. Ensure the cable's connector is correctly oriented (groove pointing up).
3. Fully insert the cable connector.
4. Rotate the locking collar clockwise (2 clicks) until it is in the locked position.

8.3 Cable ferrite installation

Your product is supplied with a suppression ferrite clamp which must be fitted according to the following instructions:

Important:
To ensure EMC Compliance, the supplied ferrite **MUST** be fitted to the cable.

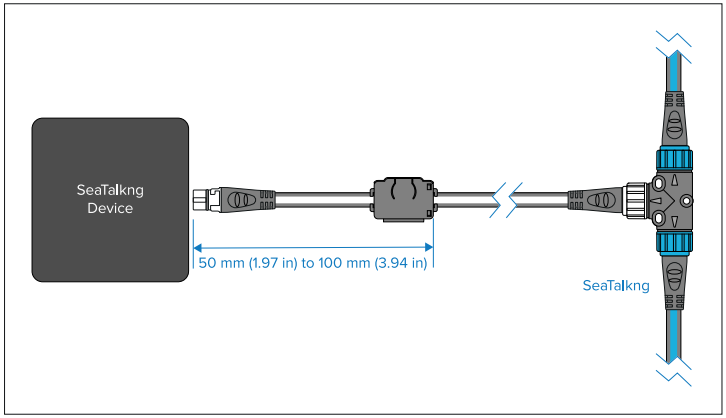

1. The ferrite must be fitted to the end of the SeaTalk NG spur cable closest to the device.
2. The ferrite must be fitted at the distance specified in the illustration above.
3. Ensure a tight and secure fit so that the ferrite will not move up or down the cable.

CHAPTER 9: NETWORK CONNECTIONS

CHAPTER CONTENTS

- 9.1 SeaTalk NG connection — page 30
- 9.2 SeaTalk 1 connection — page 31
- 9.3 NMEA 2000 connection — page 31

9.1 SeaTalk NG connection

The p70s / p70Rs can be used to control Evolution-Series or SPX-Series autopilot systems. With either autopilot system, the p70s / p70Rs is connected to the system using the same method, shown below.

Note:
An Evolution-Series system that includes an ACU-100 or ACU-150 requires a dedicated 12 V dc power supply connected to the SeaTalk NG network.

Example: basic Evolution-Series autopilot system

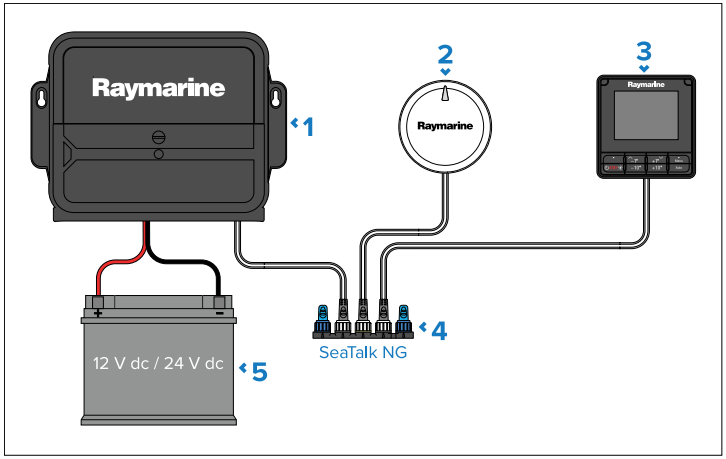

1. ACU-Series unit (e.g.: ACU-200)
2. EV-Series sensor (e.g.: EV-1)
3. p70s / p70Rs Pilot controller (p70s shown)
4. SeaTalk NG 5-way connector (A06064)
5. 12 V dc / 24 V dc power supply

Expanded system example

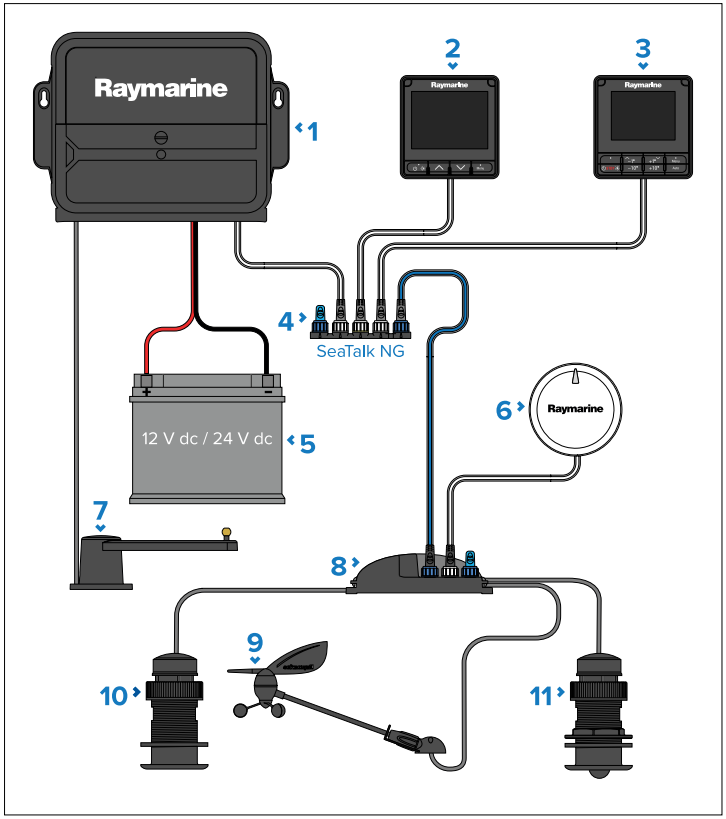

1. ACU-Series unit (e.g.: ACU-200)
2. SeaTalk NG instrument display (e.g.: i70s)
3. p70s / p70Rs Pilot controller (p70s shown)
4. SeaTalk NG 5-way connector (A06064)
5. 12 V dc / 24 V dc power supply
6. EV-Series sensor (e.g.: EV-1)
7. Rudder reference transducer (M81105)
8. iTC-5 (E70010)

9. Wind vane transducer (e.g.: short arm wind vane)
10. Depth instrument transducer (e.g.: B17 thru-hull)
11. Speed instrument transducer (e.g.: B120 thru-hull)

SeaTalk NG cables

Only used approved SeaTalk NG cabling.

For a list of SeaTalk NG cables and adaptors, please refer to: **p.56 — SeaTalk NG** cables and accessories

9.2 SeaTalk 1 connection

The p70s / p70Rs can be used to control older SeaTalk 1 autopilot systems. Connections to a SeaTalk NG network are made using a SeaTalk 1 to SeaTalk NG adaptor cable (not supplied).

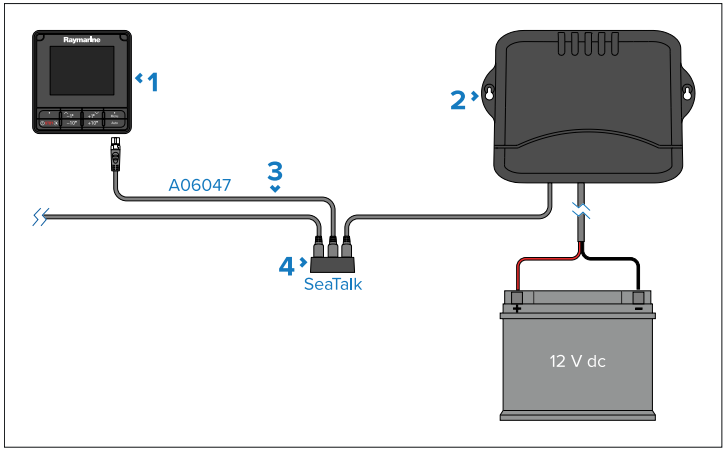

1. p70s / p70Rs Pilot controller (p70s shown)
2. SeaTalk 1 course computer (supplying 12 V dc to devices connected to the SeaTalk NG network.)
3. SeaTalk 1 to SeaTalk NG adaptor cable (A06047)
4. SeaTalk 1 connector block.

9.3 NMEA 2000 connection

The p70s / p70Rs can be used to control a compatible NMEA 2000 autopilot system. Connections to a NMEA 2000 network are made using a SeaTalk NG to DeviceNet adaptor cable (not supplied).

Note:
The NMEA 2000 autopilot system must support the same NMEA 2000 PGN messages as the p70s / p70Rs. Refer to the supported PGN list: **p.61 —** Supported NMEA 2000 PGN list

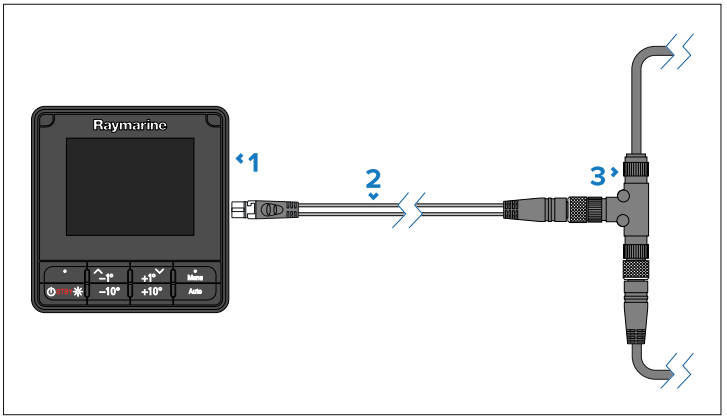

1. p70s / p70Rs Pilot controller (p70s shown).
2. SeaTalk NG to DeviceNet adaptor cable (e.g.: A06075).
3. DeviceNet T-piece connector.

CHAPTER 10: POWER CONNECTIONS

CHAPTER CONTENTS

- 10.1 SeaTalk NG power supply — page 33
- 10.2 12 Volt dc only — page 34
- 10.3 SeaTalk NG power cables — page 34
- 10.4 SeaTalk NG power cable extension — page 34
- 10.5 SeaTalk NG product loading — page 35
- 10.6 SeaTalk NG power connection point — page 35
- 10.7 SeaTalk NG system loading — page 35
- 10.8 Power distribution — SeaTalk NG — page 36
- 10.9 Power connection via Autopilot Control Unit (ACU-Series) — page 38

10.1 SeaTalk NG power supply

Your product is supplied power via the SeaTalk NG backbone (or the NMEA 2000 backbone if applicable).

A SeaTalk NG backbone requires a single 12 V dc power supply. Power can be supplied to the SeaTalk NG backbone by one of the following methods:

- (1) Direct connection to a 12 V dc battery using an inline 5 amp fuse.
- Connection to a 12 V dc distribution panel using a 3 amp thermal breaker.
- (2) Connection to the SeaTalk NG connector of an ACU-Series Autopilot Control Unit (not ACU-100 or ACU-150), or an SPX-Series course computer (not SPX-5).
- For 24 V vessels, connection must be via a 5 amp, regulated, continuous 24 V dc to 12 V dc converter.

Note:

• (1) The battery used for starting the vessel's engine(s) should NOT be used to power the SeaTalk NG backbone, as this can cause sudden voltage drops when the engines are started.

• (2) The ACU-100, ACU-150 or SPX-5 cannot be used to power the SeaTalk NG backbone.

• The course computer SeaTalk NG connector includes a power switch that must be in the On position to provide power to the backbone.

Inline fuse requirement

If your product is NOT supplied with an inline fuse (whether separately or fitted to the power cable), you MUST fit a suitably-rated inline fuse to your product's red power wire, housed in a waterproof fuse holder.

The illustration below shows the two main types of inline fuse with waterproof holder, for use in marine electronics installations. Fuses in a variety of ratings are widely available at chandleries and marine electrical retailers.
Select one of the following fuse types to protect your product:

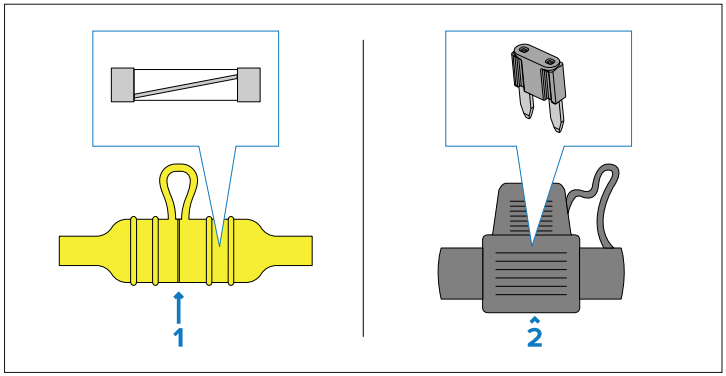

1. Waterproof fuse holder containing a "glass"-type inline fuse.
2. Waterproof fuse holder containing a "blade"-type inline fuse.

Fuse ratings:

- *Voltage rating* — must be equal to or greater than the voltage of your vessel's power supply.
- *Current rating* — refer to the *Inline fuse and thermal breaker rating* section in this document.

Inline fuse and thermal breaker ratings

The SeaTalk NG network's power supply requires a suitably-rated inline fuse or thermal breaker to be fitted.

Inline fuse rating	Thermal breaker rating
5A	3A (refer to note below)

Note:
The suitable fuse rating for the thermal breaker is dependent on:

1. How many devices you have connected to your SeaTalk NG network, and;
2. How many devices are sharing the same thermal breaker that your SeaTalk NG network is connected to.

10.2 12 Volt dc only

This product must ONLY be connected to a 12 V dc power source.

10.3 SeaTalk NG power cables

The following SeaTalk NG power cables can be used to connect the backbone to your chosen **12 V dc** power supply:

Direct connection cables

1. Standard (straight) SeaTalk NG power cable, 2 m (6.6 ft) (part number: **A06049**).
2. Elbow (right-angled) SeaTalk NG power cable, 2 m (6.6 ft) (part number: **A06070**).

Wiring

- **+ Red (positive) wire** — connects to the battery or distribution panel positive terminal. A waterproof fuse holder with 5 A inline fuse (not supplied) must be fitted to this red wire.
- **– Black (negative) wire** — connects to battery or distribution panel negative terminal.
- **Drain wire** — connects to the vessel's RF common ground point (if available), or the battery's negative (-) terminal.

Autopilot Control Unit connection cable

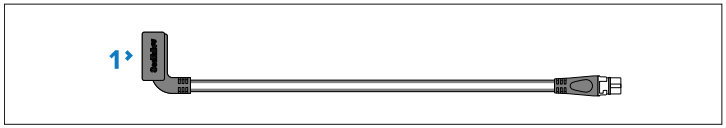

1. ACU-Series/SPX-Series autopilot to SeaTalk NG spur cable, 0.3 m (1.0 ft) (part number **R12112**). Connects the course computer to the SeaTalk NG backbone. This connection can also be used to provide 12 V dc power to the SeaTalk NG backbone.

10.4 SeaTalk NG power cable extension

If you need to extend the length of the SeaTalk NG power cable, ensure you observe the following advice:

- Ensure that any extensions of the SeaTalk NG power cable are of a sufficient gauge for the supply voltage, the total current load of the device, and the length of the cable run — as the cable run length increases, the greater the voltage drop will be from one end of the power cable to the other.
- Refer to the following table for typical **minimum** power cable wire gauges:

Cable length in meters (feet)	Wire gauge in AWG (mm^2) for 12 V supply
<8 (<25)	16 (1.31 mm^2)
16 (50)	14 (2.08 mm^2)
24 (75)	12 (3.31 mm^2)
>32 (>100)	10 (5.26 mm^2)

Important:
Be aware that some products in your system (such as sonar modules) can create voltage peaks at certain times, which may impact the voltage available to other products during the peaks.

Important:
To ensure power cables (including any extension) are of a sufficient gauge, ensure that there is a continuous **minimum** voltage of **10.8 V dc** at the end of the SeaTalk NG power cable where it enters the SeaTalk NG backbone, even with a fully flat battery at 11 V dc. (Do not assume that a flat battery is at 0 V dc. Due to the discharge profile and internal chemistry of batteries, the current drops much faster than the voltage. A "fully flat" battery still shows a positive voltage, even if it doesn't have enough current to power your device.)

10.5 SeaTalk NG product loading

The number of products that can be connected to a SeaTalk NG backbone depends on the current draw of each product and the physical length of the backbone cabling.

NMEA 2000 Load Equivalency Numbers (LEN) are used to express the amount of current that is drawn from SeaTalk NG products (**1 LEN = 50 mA**). The LEN for each product can be found in the product's *Technical Specification*.

Products which have a dedicated power supply connection and are connected to the SeaTalk NG backbone will still have an LEN rating. This is because the product's NMEA 2000 / SeaTalk NG internal transceiver will still be powered by the SeaTalk NG backbone.

LENs are used to determine the power connection point for the SeaTalk NG backbone.

10.6 SeaTalk NG power connection point

The point along the backbone where the power connection should be made is based on the length of the backbone.

Note:

- A 12 V dc power supply must be connected to a *white* spur SeaTalk NG connection on the backbone.
- Do NOT connect the power connection to a *blue* SeaTalk NG backbone connector.
- **With the exception of** the iTC-5 and the backbone itself, do NOT connect the power supply directly to a product's *white* SeaTalk NG spur connector.

Small systems

If the backbone length is 60 m (197 ft) or less, the power connection may be made at any point in the backbone.

Large systems

If the backbone length is greater than 60 m (197 ft), the power connection should be made at a point that creates a balanced current draw from each side of the backbone. Load Equivalency Numbers (LEN) are used to determine the power connection point for the system.

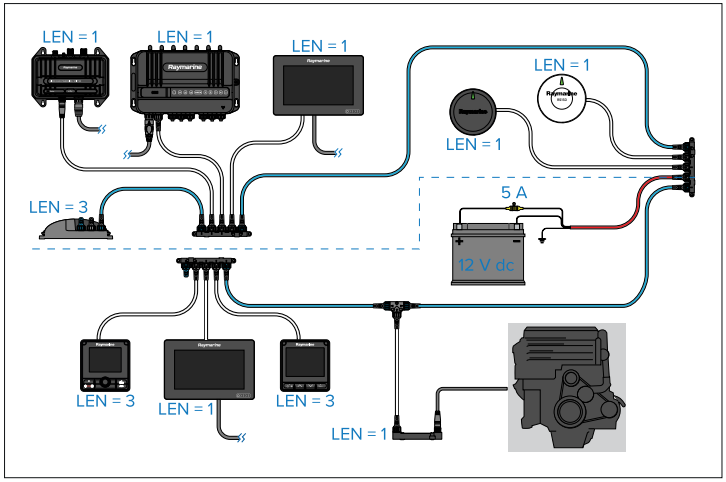

In the example above, the system has an overall LEN of 16, so the optimum connection point would be to have a loading of 8 LEN either side of the connection point.

10.7 SeaTalk NG system loading

The maximum loading (LEN) for a SeaTalk NG system depends on the length of the backbone.

Unbalanced system loading:

- **Backbone Length**: 0 m (0 ft) to 20 m (66 ft) — **Maximum LEN**: 40
- **Backbone Length**: > 20 m (66 ft) to 40 m (131 ft) — **Maximum LEN**: 20
- **Backbone Length**: > 40 m (131 ft) to 60 m (197 ft) — **Maximum LEN**: 14

Balanced system loading:

- **Backbone Length**: 0 m (0 ft) to 60 m (197 ft) — **Maximum LEN**: 100
- **Backbone Length**: > 60 m (197 ft) to 80 m (262 ft) — **Maximum LEN**: 84
- **Backbone Length**: > 80 m (262 ft) to 100 m (328 ft) — **Maximum LEN**: 60
- **Backbone Length**: > 100 m (328 ft) to 120 m (394 ft) — **Maximum LEN**: 50

- **Backbone Length**: > 120 m (394 ft) to 160 m (525 ft) — **Maximum LEN**: 40
- **Backbone Length**: > 160 m (525 ft) to 200 m (656 ft) — **Maximum LEN**: 32

10.8 Power distribution — SeaTalk NG

Recommendations and best practice.

- Only use approved SeaTalk NG power cables. Do NOT use a power cable designed for, or supplied with, a different product.
- See below for more information on implementation for some common power distribution scenarios.

Important:

• When planning and wiring, take into consideration other products in your system, some of which (e.g. sonar modules) may place large power demand peaks on the vessel's electrical system, which may impact the voltage available to other products during the peaks.

• The information provided below is for guidance only, to help protect your product. It covers common vessel power arrangements, but does NOT cover every scenario. If you are unsure how to provide the correct level of protection, please consult an authorized Raymarine dealer or a suitably qualified professional marine electrician.

Implementation — connection to distribution panel (recommended)

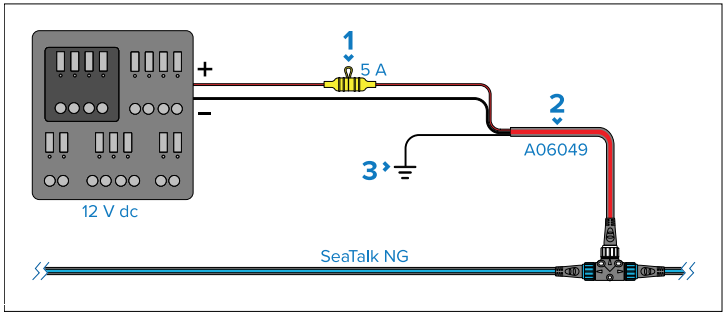

1. Waterproof fuse holder with 5 A inline fuse must be fitted (not supplied).
2. SeaTalk NG power cable.
3. RF Ground connection point for drain wire.

- Ideally, the SeaTalk NG power cable should be connected to a suitable breaker or switch on the vessel's distribution panel or factory-fitted power distribution point. It is recommended that a 5 A inline fuse is fitted to the red (positive) wire of the SeaTalk NG power cable.
- The distribution point should be fed from the vessel's primary power source by 8 AWG (8.36 mm²) cable.
- Ideally, all equipment should be wired to individual suitably-rated thermal breakers or fuses, with appropriate circuit protection. Where this is not possible and more than one item of equipment shares a breaker, use individual in-line fuses for each power circuit to provide the necessary protection.

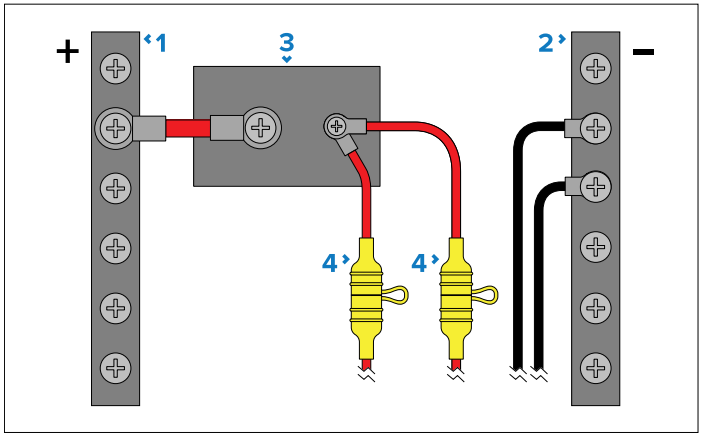

1. Positive (+) bar
2. Negative (-) bar
3. Circuit breaker
4. Waterproof fuse holder with 5 A inline fuse must be fitted (not supplied).

Important:
Observe the recommended fuse / breaker ratings provided in the product's documentation, however be aware that the suitable fuse / breaker rating is dependent on the number of devices being connected.

Implementation — direct connection to battery

- Where connection to a power distribution panel is not possible, the power cable may be connected to the vessel's battery.
- You MUST fit a 5 A inline fuse between the red wire and the battery's positive terminal.
- If you need to extend the length of the power cable, ensure you use suitably rated cable and that sufficient power (12 V dc) is available at the SeaTalk NG backbone's power connection.

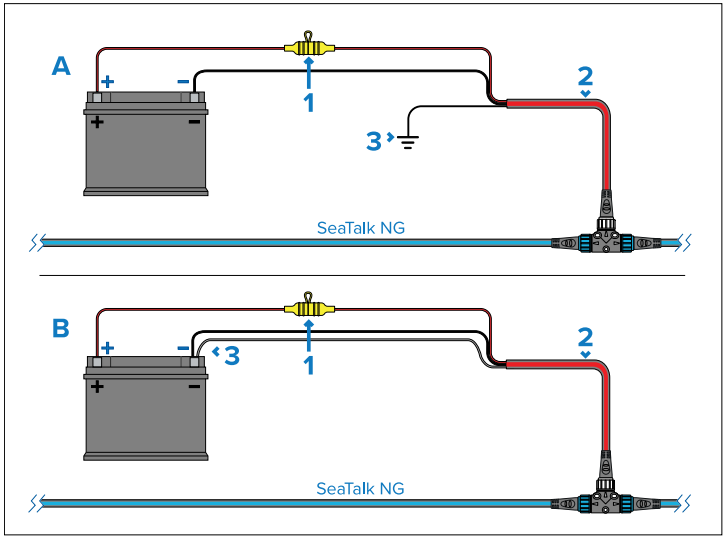

1. Waterproof fuse holder with 5 A inline fuse must be fitted (not supplied).
2. SeaTalk NG power cable.
3. Connection point for drain wire.

Battery connection scenario A:
Suitable for a vessel with a common RF ground point. In this scenario, the power cable's drain wire should be connected to the vessel's common RF ground point.
Battery connection scenario B:
Suitable for a vessel without a common RF ground point. In this scenario the power cable's drain wire should be connected directly to the battery's negative terminal.

SeaTalk NG Power cable extension

If you need to extend the length of the SeaTalk NG power cable, ensure you use suitably-rated cable, and that sufficient power is available at the SeaTalk NG backbone's power connection point:

- For power cable extensions, a **minimum** wire gauge of 16 AWG (1.31 mm^2) is recommended. For cable runs longer than 15 m (49.2 ft), you may need to consider a thicker wire gauge (e.g. 14 AWG (2.08 mm^2), or 12 AWG (3.31 mm^2).
- To ensure power cables (including any extension) are of a sufficient gauge, ensure that there is a continuous **minimum** voltage of **10.8 V dc** at the end of the cable where it enters the product's power connector, even with a fully flat battery at 11 V dc. (Do not assume that a flat battery is at 0 V dc. Due to the discharge profile and internal chemistry of batteries, the current drops much faster than the voltage. A "fully flat" battery still shows a positive voltage, even if it doesn't have enough current to power your device.)

Important:
Be aware that some products in your system (such as sonar modules) can create voltage peaks at certain times, which may impact the voltage available to other products during the peaks.

More information

It is recommended that best practice is observed in all vessel electrical installations, as detailed in the following standards:

- BMEA Code of Practice for Electrical and Electronic Installations in Boats
- NMEA 0400 Installation Standard
- ISO 13297: Small craft — Electrical systems — Alternating and direct current installations

- ISO 10133: Small craft — Electrical systems — Extra-low-voltage d.c. installations
- ABYC E-11 AC & DC Electrical Systems on Boats
- ABYC A-31 Battery chargers and Inverters
- ABYC TE-4 Lightning Protection

Warning: 12 Volt dc only

This product must ONLY be connected to a 12 V dc power source.

Warning: Positive ground systems

Do NOT connect this unit to a system which has positive grounding.

Warning: Product grounding

Before applying power to this product, it MUST be correctly grounded, in accordance with the instructions provided.

10.9 Power connection via Autopilot Control Unit (ACU-Series)

The SeaTalk NG backbone can be supplied 12 V dc power from a compatible Raymarine Autopilot Control Unit (ACU-Series).

Important:
The SeaTalk NG backbone must have a single power supply connection. If your SeaTalk NG backbone is supplied power directly from a battery or distribution panel, then you must ensure that the SeaTalk NG power switch on your ACU-Series is switched Off.

Note:
ACU-100, ACU-150 and SPX-5 autopilot control units cannot supply power to the SeaTalk NG backbone.

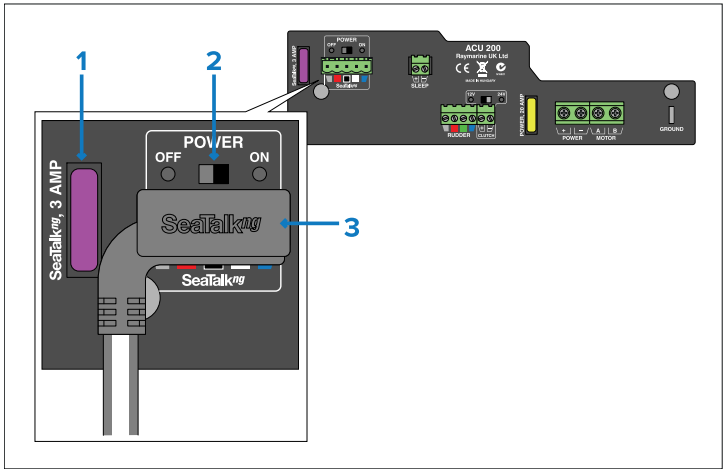

1. Fuse for SeaTalk NG power supply.
2. Power switch for SeaTalk NG power supply:
   a. Select the *[OFF]* position if your SeaTalk NG backbone is supplied power directly from a battery or distribution panel.
   b. Select the *[ON]* position if your SeaTalk NG backbone is supplied power by the ACU-Series.
3. ACU-Series/SPX-Series autopilot to SeaTalk NG spur cable (part number: R12112).

CHAPTER 11: COMMISSIONING

CHAPTER CONTENTS

- 11.1 Commissioning and Operation Instructions — page 40

11.1 Commissioning and Operation Instructions

For detailed information related to the Commissioning and Operation of your autopilot system using the p70s / p70Rs, refer to the *Commissioning and Operation Instructions* document.

Document	Number	Link
p70s / p70Rs *Commissioning and Operation Instructions*	81402	www.bit.ly/p70s-docs

CHAPTER 12: OPERATION

CHAPTER CONTENTS

- 12.1 Controls — page 42
- 12.2 Commissioning and Operation Instructions — page 43

12.1 Controls

Use the physical buttons to operate the display. Each button has multiple functions.

Note:
The p70s and p70Rs are pictured below. The p70 and p70R have the same control buttons as the p70s and p70Rs.

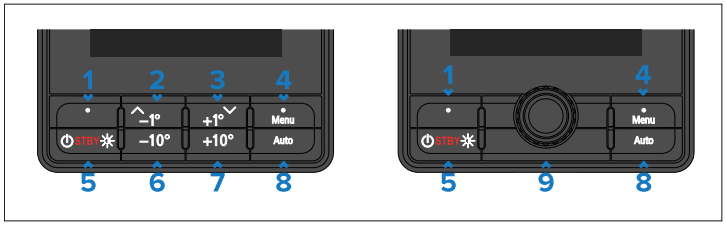

	Description
1	*[Left soft button]* • Cancel • Back • Select pilot mode
2	*[Up] / [-1°]* • Decrease heading by 1° • Move up in menu • Increase numerical value
3	*[Down] / [+1°]* • Increase heading by 1° • Move down in menu • Decrease numerical value
4	*[Menu] / [Right soft button]* • Open menu • Select menu item • OK • Save
5	*[Standby] / [Power]* • Disengage autopilot (standby) • Power on • Power off • Open Brightness page • Cancel • Back
6	*[–10°]* — Decrease heading by 10°
7	*[+10°]* — Increase heading by 10°
8	*[Auto]* — Engage autopilot
9	*[Rotary controller]* • Turn clockwise to increase heading, move down through menu items or to increase a numerical value. • Turn counter-clockwise to decrease heading, move up through menu items or to decrease a numerical value. • Push the center of the rotary controller to select a menu option or save a change to a menu setting.

The p70s also supports the following combination button presses:

- *[–1°]* and *[–10°]*
  - Perform an *[Auto Turn]* to port.
  - In wind vane mode, perform an AutoTack to port.
- *[+1°]* and *[+10°]*
  - Perform an *[Auto Turn]* to starboard.

– In wind vane mode, perform an AutoTack to starboard.

Note:

• Any combination button press which includes the *[Standby]* button will disengage your autopilot.

• By default, the *[Auto Turn]* angle is set to 90°. The turn angle can only be configured via a compatible MFD, using the *[Drive Settings]*. *[Menu > Set-up > Autopilot Calibration > Drive Settings > Auto Turn]*.

12.2 Commissioning and Operation Instructions

For detailed information related to the Commissioning and Operation of your autopilot system using the p70s / p70Rs, refer to the *Commissioning and Operation Instructions* document.

Document	Number	Link
p70s / p70Rs *Commissioning and Operation Instructions*	81402	www.bit.ly/p70s-docs

CHAPTER 13: MAINTENANCE

CHAPTER CONTENTS

- 13.1 Routine equipment checks — page 45
- 13.2 Product cleaning — page 45
- 13.3 Cleaning the display screen — page 45
- 13.4 Cleaning the display case — page 45
- 13.5 Cleaning the sun cover — page 45

13.1 Routine equipment checks

It is recommended that you perform the following routine checks, on a regular basis, to ensure the correct and reliable operation of your equipment:

- Examine all cables for signs of damage or wear and tear.
- Check that all cables are securely connected.

13.2 Product cleaning

Best cleaning practices.

When cleaning products:

- Switch off power supply.
- Use a clean damp cloth to wipe clean.
- Do NOT use: abrasive, acidic, ammonia, solvent or other chemical-based cleaning products.
- Do NOT use a jet wash.

13.3 Cleaning the display screen

A coating is applied to the display screen. This makes it water repellent, and prevents glare. To avoid damaging this coating, follow this procedure:

1. Switch off the power to the display.
2. Rinse the screen with fresh water to remove all dirt particles and salt deposits.
3. Allow the screen to dry naturally.
4. If any smears remain, very gently wipe the screen with a clean microfibre cleaning cloth.

13.4 Cleaning the display case

The display is a sealed unit and does not require regular cleaning. If it is necessary to clean the display, follow this basic procedure:

1. Switch off the power to the display.
2. Wipe the case with a clean, lint-free cloth.
3. If necessary, use a mild detergent to remove grease marks.

13.5 Cleaning the sun cover

The supplied sun cover features an adhesive surface. In certain conditions unwanted contaminants may stick to this surface. To avoid damaging the monitor display, clean the sun cover regularly following this procedure:

1. Carefully remove the sun cover from the display.
2. Rinse the sun cover with fresh water to remove all dirt particles and salt deposits.
3. Allow the sun cover to dry naturally.

CHAPTER 14: SYSTEM CHECKS AND TROUBLESHOOTING

CHAPTER CONTENTS

- 14.1 Troubleshooting — page 47
- 14.2 Power up troubleshooting — page 47
- 14.3 System data troubleshooting — page 48
- 14.4 Miscellaneous troubleshooting — page 49

14.1 Troubleshooting

The troubleshooting section provides possible causes and the corrective action required for common problems that are associated with the installation and operation of your product.

Before packing and shipping, all products are subjected to comprehensive testing and quality assurance programs. If you do experience problems with your product, this section will help you to diagnose and correct problems to restore normal operation.

If after referring to this section you are still having problems with your product, please refer to the *Technical support and servicing* section of this manual for useful links and contact details.

14.2 Power up troubleshooting

Product does not turn on or keeps turning off

Possible causes	Possible solutions
Blown fuse / tripped breaker	1. Check condition of the SeaTalk NG backbone power connection 5 A fuse and if applicable distribution panel breaker, replace if necessary. 2. If the fuse keeps blowing check for cable damage, broken connector pins or incorrect wiring.
Poor / damaged / insecure cables and connections	1. Check the vessel's battery voltage and the condition of the battery terminals and power supply cables, ensuring connections are secure, clean and free from corrosion. Replace if necessary. 2. Check all SeaTalk NG cabling and connections for signs of damage or corrosion. Replace if necessary. 3. Check all SeaTalk NG connectors are correctly orientated, fully inserted and in the locked position. 4. With the display turned on, try flexing the display's spur cable near to the display's connector to see if this causes the display to restart or lose power. Replace if necessary. 5. With the product under load, using a multi-meter, check for high voltage drop across all connectors / fuses etc, and replace if necessary.
Incorrect power connection	1. The power supply may be wired incorrectly, ensure the SeaTalk NG power connection instructions have been followed and that the backbone has one single source of 12 V dc power.

Product will not start up (restart loop)

Product causes	Possible solutions
Power supply and connection	1. Refer to 'Product does not turn on or keeps turning off' information above.
Software corruption	1. In the unlikely event that the product's software has become corrupted, try downloading and installing the latest software from the Raymarine website. refer to your Multifunction Display's operation instructions for details on updating software for SeaTalk NG devices. 2. In the case of a restart loop attempt a factory reset using the following instructions: **p.48 — Performing a Factory Reset**

Performing a Factory Reset

To reset your unit to factory default settings follow the steps below.

Note:
Performing a factory reset will erase all saved data and customized settings.

1. Press the *[Menu]* button.
2. Select *[Set Up]*.
3. Select *[Factory Reset]*.
4. Select *[Yes]*.

   Your unit will now reset itself to factory default settings.

14.3 System data troubleshooting

Aspects of the installation can cause problems with the data shared between connected equipment. Such problems, their possible causes and solutions are described here.

Expected data is unavailable at all displays

Possible causes	Possible solutions
Data is not being received at the display.	1. Check the relevant product and or network cabling and connections (e.g. SeaTalk NG backbone) for signs of damage or corrosion, and replace if necessary.
Data source (e.g. instrument display or engine interface) is not operating.	1. Check the source of the missing data (e.g. transducer or engine interface) for signs of damage or corrosion, and replace if necessary. 2. If possible, check that the data source is correctly powered and operational. 3. Refer to the instructions provided with the equipment to ensure it has been correctly installed.
Software mismatch between equipment may prevent communication.	1. Ensure all products have the latest software installed.

Expected data is missing from some but not all displays

Possible causes	Possible solutions
Connection problem.	1. Check the product's SeaTalk NG spur cable and connections for signs of damage or corrosion, and replace if necessary.
Software corruption.	1. In the unlikely event that the product's software has become corrupted, try downloading and installing the latest software from the Raymarine website. refer to your Multifunction Display's operation instructions for details on updating software for SeaTalk NG devices. 2. In the case of a restart loop attempt a factory reset using the following instructions: **p.48 — Performing a Factory Reset**
Software mismatch between equipment may prevent communication.	1. Ensure all products have the latest software installed.

Incorrect data reported

Possible causes	Possible solutions
Transducer calibration error.	1. Switch off power supply to system and switch back on again. 2. Re-calibrate or re-configure data source following instructions provided with the relevant devices.

14.4 Miscellaneous troubleshooting

Miscellaneous problems and their possible causes and solutions are described here.

Display behaves erratically

Frequent unexpected resets, system crashes and other erratic behavior

Possible causes	Possible solutions
Intermittent problem with power to the display.	1. Check relevant fuses and breakers. 2. Check that the power supply cable is sound and that all connections are tight and free from corrosion. 3. Check that the power source is of the correct voltage and sufficient current.
Software mismatch between equipment may prevent communication.	1. Ensure all products have the latest software installed.
Corrupt data / other unknown issue.	1. In the unlikely event that the product's software has become corrupted, try downloading and installing the latest software from the Raymarine® website. Refer to your multifunction display's operation instructions for details on updating software for SeaTalk NG devices. 2. Check the data source for correct operation.

CHAPTER 15: TECHNICAL SPECIFICATION

CHAPTER CONTENTS

- 15.1 Technical specification — page 51

15.1 Technical specification

Specification	
Nominal supply voltage:	12 V dc
Operating voltage range:	10.8 V to 16 V dc
Current:	131 mA
Power consumption:	1.57 W
LEN rating:	3
Operating temperature range:	–20°C to 55°C (–4°F to 131°F)
Storage temperature range:	–30°C to 70°C (–22°F to 158°F)
Relative humidity:	93% Max.
Waterproof rating:	IPx6, IPx7
LCD specification:	• 3.45” TFT LCD display • 16-bit color (64,000 colors) • Resolution: 320(H) x 240(V) • Brightness: 1200 nits / 1200 cd/m^2
Data connections:	1x SeaTalk NG connector
Conformance:	• NMEA 2000 certification pending • Europe 2004/108/EC • Australia and New Zealand C-Tick, compliance level 2

CHAPTER 16: TECHNICAL SUPPORT

CHAPTER CONTENTS

- 16.1 Raymarine technical support and servicing — page 53
- 16.2 Learning resources — page 54

16.1 Raymarine technical support and servicing

Raymarine provides a comprehensive product support service, as well as warranty, service, and repairs. You can access these services through the Raymarine website, telephone, and e-mail.

Product information

If you need to request service or support, please have the following information to hand:

- Product name.
- Product identity.
- Serial number.
- Software application version.
- System diagrams.

Servicing and warranty

Raymarine offers dedicated service departments for warranty, service, and repairs.
Visit the Raymarine website to **read the latest warranty policy**, and **register** your product's warranty online:

- www.bit.ly/rym-warranty

United Kingdom (UK), EMEA, and Asia Pacific:

- Web: www.bit.ly/rym-service
- Tel: +44 (0)1329 246 932

United States (US):

- Web: www.bit.ly/rym-service
- Tel: +1 (603) 324 7900

Web support

Please visit the "Support" area of the Raymarine website for:

- **Manuals and Documents** — www.bit.ly/rym-docs
- **Technical support forum** — www.bit.ly/rym-support
- **Software updates** — www.bit.ly/rym-software

Telephone and online support

Region	Contact details
All regions	**Online support:** www.bit.ly/rym-support
United Kingdom (UK) and EMEA	**Telephone:** +44 (0)1329 246 777 **Address:** Marine House, Cartwright Drive, Fareham, PO15 5RJ, UK.
United States (US)	**Telephone:** Tel: +1 (603) 324 7900 (Toll-free: +800 539 5539) **Address:** 110 Lowell Road, Hudson, NH 03051, USA.
Australia and New Zealand (Raymarine subsidiary)	**Telephone:** +61 2 8977 0300 **Address:** Suite 1.01, 26 Rodborough Road, Frenchs Forest, NSW, 2086, Australia.
France (Raymarine subsidiary)	**Telephone:** +33 (0)1 46 49 72 30 **Address:** 35 avenue Michel Crépeau, 17000 La Rochelle - France.
Germany (Raymarine subsidiary)	**Telephone:** +49 40 237 808 0 **Address:** Atlantic-Haus, Zirkusweg 1, 20359 Hamburg.
Italy (Raymarine subsidiary)	**Telephone:** +39 02 9945 1001 **Address:** Via L. Manara 2, 20812 Limbiate (MB), Italy.
Spain (Authorized Raymarine distributor)	**Telephone:** +34 96 2965 102 **Email:** sat@azimut.es
Netherlands / Benelux (Authorized Raymarine distributor)	**Telephone:** +31 (0)26 3614 905 **Address:** Florijnweg 21G, 6883 JN VELP, Nederland.

Region	Contact details
Sweden (Raymarine subsidiary)	**Telephone:** +46 (0)317 633 670 **Address:** Bolshedens Industriväg 18, 427 50 Billdal, Sweden.
Finland (Raymarine subsidiary)	**Telephone:** +358 (0)207 619 937 **Address:** Suomalaistentie 1-3, 02270 Espoo, Finland.
Norway (Raymarine subsidiary)	**Telephone:** +47 692 64 600 **Address:** Årvollskogen 30, 1529 Moss, Norway.
Denmark (Raymarine subsidiary)	**Telephone:** +45 437 164 64 **Address:** Centervej 7, 4600 Køge, Denmark.
Russia (Distributor)	**Telephone:** Tel: +7 495 788 0508 **Email:** info@mikstmarine.ru

Checking hardware and software information

You can check current hardware details and software version from the *[About display]* menu.

1. Press the *[Menu]* button.
2. Select *[Set-up]*.
3. Select *[Diagnostics]*.
4. Select *[About Display]*.

   A range of information is displayed, including the *software version* and *Serial number*.
5. Use the *[Up]* and *[Down]* buttons to cycle through the information.

16.2 Learning resources

Raymarine has produced a range of learning resources to help you get the most out of your products.

Video tutorials

Raymarine official channel on YouTube

- http://www.youtube.com/user/RaymarineInc

Training courses

Raymarine regularly runs a range of in-depth training courses to help you make the most of your products. Visit the Training section of the Raymarine website for more information:

- www.bit.ly/rym-training

Technical support forum

You can use the Technical support forum to ask a technical question about a Raymarine product or to find out how other customers are using their Raymarine equipment. The resource is regularly updated with contributions from Raymarine customers and staff:

- www.bit.ly/rym-support

CHAPTER 17: SPARES AND ACCESSORIES

CHAPTER CONTENTS

- 17.1 Spares and Accessories — page 56
- 17.2 SeaTalk NG cables and accessories — page 56

17.1 Spares and Accessories

- **A80353** — Black bezel for i70s / p70s / p70Rs
- **A80354** — Gunmetal bezel I for i70s / p70s / p70Rs
- **A80357** — Suncover for i70s / p70s
- **A80358** — Suncover for p70Rs

17.2 SeaTalk NG cables and accessories

SeaTalk NG cables and accessories for use with compatible products.

SeaTalk NG kits

SeaTalk NG kits enable you to create a simple SeaTalk NG backbone. **Starter kit (part number: T70134)** consists of:

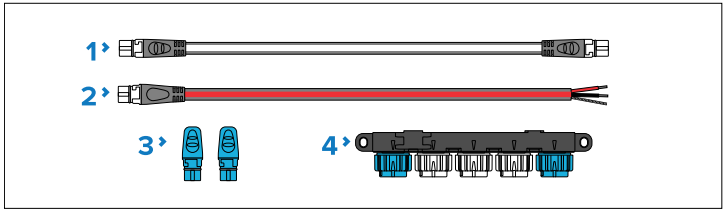

1. 1 x Spur cable 3 m (9.8 ft) (part number: **A06040**). Used to connect device to the SeaTalk NG backbone.
2. 1 x Power cable 2 m (6.6 ft) (part number: **A06049**). Used to provide 12 V dc power to the SeaTalk NG backbone.
3. 2 x Backbone terminators (part number: **A06031**). Terminators must be fitted to both ends of the SeaTalk NG backbone.
4. 1 x 5-Way connector (part number: **A06064**). Each connector block allows connection of up to 3 SeaTalk NG devices. Multiple connector blocks can be 'daisy chained' together.

Backbone kit (part number: A25062) consists of:

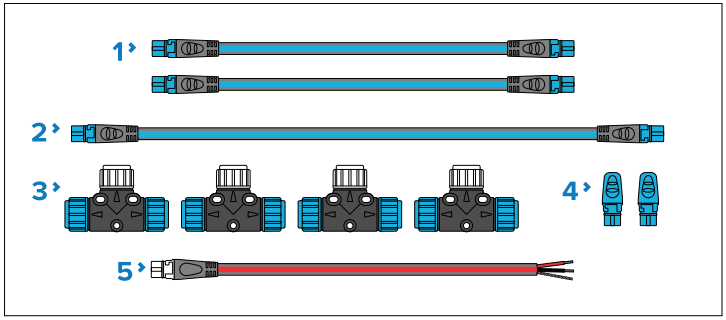

1. 2 x Backbone cables 5 m (16.4 ft) (part number: **A06036**). Used to create and extend the SeaTalk NG backbone.
2. 1 x Backbone cable 20 m (65.6 ft) (part number: **A06037**). Used to create and extend the SeaTalk NG backbone.
3. 4 x T-piece (part number: **A06028**). Each T-piece allows connection of one SeaTalk NG device. Multiple T-pieces can be 'daisy chained' together.
4. 2 x Backbone terminators (part number: **A06031**). Terminators must be fitted to both ends of the SeaTalk NG backbone.
5. 1 x Power cable 2 m (6.6 ft) (part number: **A06049**). Used to provide 12 V dc power to the SeaTalk NG backbone.

Evolution-Series autopilot cable kit (part number: R70160) consists of:

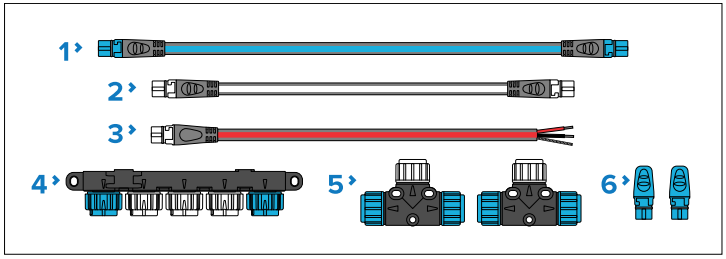

1. 1 x Backbone cable 5 m (16.4 ft) (part number: **A06036**). Used to create and extend the SeaTalk NG backbone.
2. 1 x Spur cable 1 m (3.3 ft) (part number: **A06040**). Used to connect device to the SeaTalk NG backbone.
3. 1 x Power cable 2 m (6.6 ft) (part number: **A06049**). Used to provide 12 V dc power to the SeaTalk NG backbone.

4. 1 x 5-Way connector (part number: **A06064**). Each connector block allows connection of up to 3 SeaTalk NG devices. Multiple connector blocks can be 'daisy chained' together.
5. 2 x T-pieces (part number: **A06028**). Each T-piece allows connection of one SeaTalk NG device. Multiple T-pieces can be 'daisy chained' together.
6. 2 x Backbone terminators (part number: **A06031**). Terminators must be fitted to both ends of the SeaTalk NG backbone.

SeaTalk 1 to SeaTalk NG converter kit (part number: E22158) consists of:

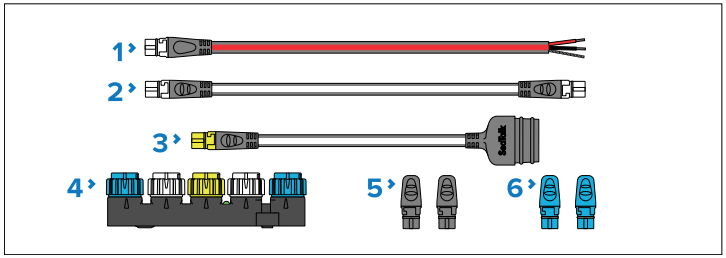

1. 1 x Power cable 2 m (6.6 ft) (part number: **A06049**). Used to provide 12 V dc power to the SeaTalk NG backbone.
2. 1 x Spur cable 1 m (3.3 ft) (part number: **A06039**). Used to connect a device to the SeaTalk NG backbone.
3. 1 x SeaTalk 1 (3 pin) to SeaTalk NG adapter cable 0.4 m (1.3 ft) (part number: **A22164**). Used to connect SeaTalk 1 devices to the SeaTalk NG backbone via the SeaTalk 1 to SeaTalk NG converter.
4. 1 x SeaTalk 1 to SeaTalk NG converter (part number: **E22158**). Each converter allows connection of one SeaTalk 1 device and up to 2 SeaTalk NG devices.
5. 2 x Spur blanking plugs (part number: **A06032**). Used to cover unused spur connections in 5-way blocks, T-piece connectors and SeaTalk 1 to SeaTalk NG converter.
6. 2 x Backbone terminators (part number: **A06031**). Terminators must be fitted to both ends of the SeaTalk NG backbone.

NMEA 0183 VHF 2-wire to SeaTalk NG converter kit (part number: E70196) consists of:

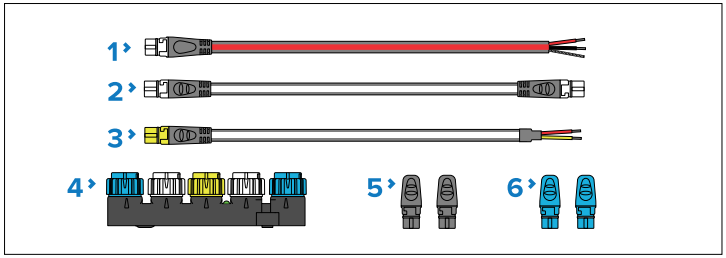

1. 1 x Power cable 2 m (6.6 ft) (part number: **A06049**). Used to provide 12 V dc power to the SeaTalk NG backbone.
2. 1 x Spur cable 1 m (3.3 ft) (part number: **A06039**). Used to connect a device to the SeaTalk NG backbone.
3. 1 x NMEA 0183 VHF stripped-end (2-wire) to SeaTalk NG adapter cable 1 m (3.3 ft) (part number: **A06071**). Used to connect an NMEA 0183 VHF radio to the SeaTalk NG backbone via the NMEA 0183 to SeaTalk NG converter.
4. 1 x SeaTalk 1 to SeaTalk NG converter (part number: **E22158**). Each converter allows connection of one SeaTalk 1 device and up to 2 SeaTalk NG devices.
5. 2 x Spur blanking plugs (part number: **A06032**). Used to cover unused spur connections in 5-way blocks, T-piece connectors, and the SeaTalk 1 to SeaTalk NG converter.
6. 2 x Backbone terminators (part number: **A06031**). Terminators must be fitted to both ends of the SeaTalk NG backbone.

SeaTalk NG spur cables
SeaTalk NG spur cables are required to connect devices to the SeaTalk NG backbone.

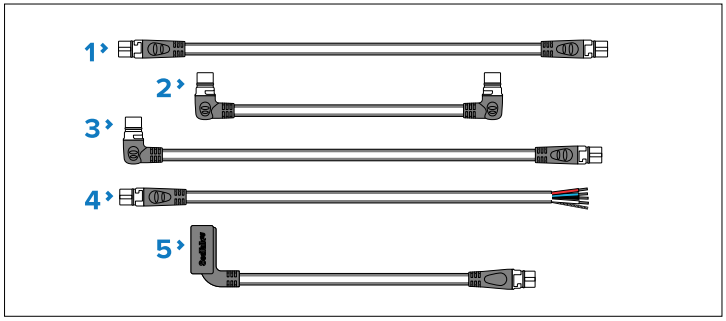

1. SeaTalk NG spur cables:
   - Spur cable 0.4 m (1.3 ft) (part number: **A06038**).
   - Spur cable 1 m (3.3 ft) (part number: **A06039**).
   - Spur cable 3 m (9.8 ft) (part number: **A06040**).
   - Spur cable 5 m (16.4 ft) (part number: **A06041**).
2. Elbow (right-angled) to elbow (right-angled) spur cable 0.4 m (1.3 ft) (part number: **A06042**). Used in confined spaces where a straight spur cable will not fit.
3. Elbow (right-angled) to straight spur cable 1 m (3.3 ft) (part number: **A06081**). Used in confined spaces where a straight spur cable will not fit.
4. SeaTalk NG to stripped-end spur cables (connects compatible products that do not have a SeaTalk NG connector, such as transducer pods):
   - SeaTalk NG to stripped-end spur cable 1 m (3.3 ft) (part number: **A06043**)
   - SeaTalk NG to stripped-end spur cable 3 m (9.8 ft) (part number: **A06044**)
5. ACU-Series / SPX-Series autopilot to SeaTalk NG spur cable 0.3 m (1.0 ft) (part number **R12112**). Connects the course computer to the SeaTalk NG backbone. This connection can also be used to provide 12 V dc power to the SeaTalk NG backbone.

SeaTalk NG backbone cables

SeaTalk NG backbone cables are used to create or extend a SeaTalk NG backbone.

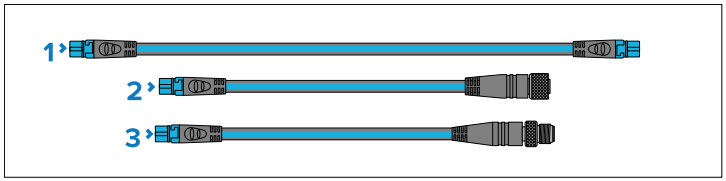

1. Backbone cables:
   - Backbone cable 0.4 m (1.3 ft) (part number: **A06033**).
   - Backbone cable 1 m (3.3 ft) (part number: **A06034**).
   - Backbone cable 3 m (9.8 ft) (part number: **A06035**).
   - Backbone cable 5 m (16.4 ft) (part number: **A06036**).
   - Backbone cable 9 m (29.5 ft) (part number: **A06068**).
   - Backbone cable 20 m (65.6 ft) (part number: **A06037**).
2. SeaTalk NG to DeviceNet (female) Backbone cable 0.4 m (1.3 ft) (part number: **A80675**)
3. SeaTalk NG to DeviceNet (male) Backbone cable 0.4 m (1.3 ft) (part number: **A80674**)

SeaTalk NG power cables

SeaTalk NG power cables are used to provide the SeaTalk NG backbone with a single 12 V dc power source. The power connection must include a 5 amp inline fuse (not supplied).

1. Power cable (straight) 2 m (6.6 ft) (part number: **A06049**).
2. Elbow (right-angled) power cable 2 m (6.6 ft) (part number: **A06070**).

SeaTalk NG connectors

SeaTalk NG connectors are used to connect SeaTalk NG devices to the SeaTalk NG backbone and to create and extend the backbone.

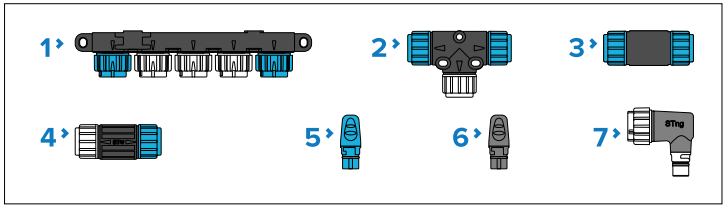

1. 5-Way connector (part number: **A06064**). Each connector block allows connection of up to 3 SeaTalk NG devices. Multiple connector blocks can be 'daisy chained' together.
2. T-piece (part number: **A06028**). Each T-piece allows connection of one SeaTalk NG device. Multiple T-pieces can be 'daisy chained' together.
3. Backbone extender (part number: **A06030**). Used to connect 2 backbone cables together.
4. Inline terminator (part number: **A80001**). Used to connect a spur cable and SeaTalk NG device at the end of a backbone instead of a backbone terminator.

5. Backbone terminator (part number: **A06031**). Terminators must be fitted to both ends of the SeaTalk NG backbone.

6. Spur blanking plug (part number: **A06032**). Used to cover unused spur connections in 5-Way blocks, T-piece connectors, or the SeaTalk 1 to SeaTalk NG converter.

7. Elbow (right-angled) spur connector (part number: **A06077**). Used in confined spaces where a straight spur cable will not fit.

SeaTalk NG adaptors and adaptor cables

SeaTalk NG adaptor cables are used to connect devices designed for different CAN Bus backbones (e.g.: SeaTalk 1 or DeviceNet) to the SeaTalk NG backbone.

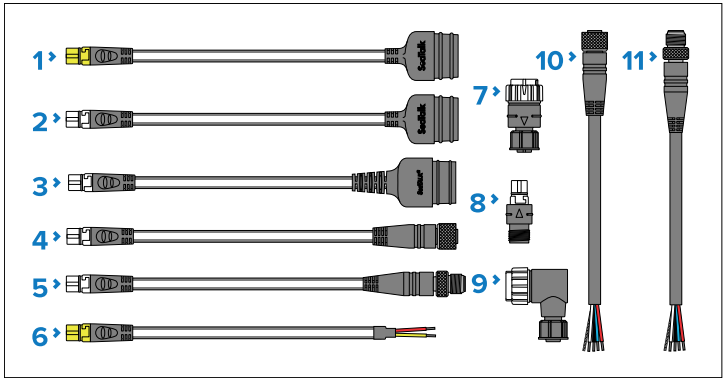

1. SeaTalk 1 (3 pin) to SeaTalk NG converter cable 1 m (3.3 ft) (part number: **A22164 / A06073**). Can be used to connect a SeaTalk 1 device to a SeaTalk NG backbone via the SeaTalk 1 to SeaTalk NG converter, or to connect a SeaTalk NG product directly to a SeaTalk 1 network.

2. SeaTalk 1 (3 pin) to SeaTalk NG adaptor cable 0.4 m (1.3 ft) (part number: **A06047**). Can be used to connect a SeaTalk 1 device to a SeaTalk NG backbone via the SeaTalk 1 to SeaTalk NG converter, or to connect a SeaTalk NG product directly to a SeaTalk 1 network.

3. SeaTalk 2 (5 pin) to SeaTalk NG adaptor cable 0.4 m (1.3 ft) (part number: **A06048**). Used to connect SeaTalk 2 devices or networks to a SeaTalk NG backbone.

4. SeaTalk NG to DeviceNet (female) adaptor cables connect NMEA 2000 devices that use a DeviceNet connector to the SeaTalk NG backbone, or connects SeaTalk NG devices to an NMEA 2000 network. The following cables are available:

   - SeaTalk NG to DeviceNet (female) adaptor cable 0.4 m (1.3 ft) (part number: **A06045**).
   - SeaTalk NG to DeviceNet (female) adaptor cable 1 m (3.3 ft) (part number: **A06075**).

5. SeaTalk NG to DeviceNet (male) adaptor cables. Connect NMEA 2000 devices that use a DeviceNet connector to the SeaTalk NG backbone, or connect SeaTalk NG devices to an NMEA 2000 network. The following cables are available:

   - SeaTalk NG to DeviceNet (male) adaptor cable 0.1 m (0.33 ft) (part number: **A06078**).
   - SeaTalk NG to DeviceNet (male) adaptor cable 0.4 m (1.3 ft) (part number: **A06074**).
   - SeaTalk NG to DeviceNet (male) adaptor cable 1 m (3.3 ft) (part number: **A06076**).
   - SeaTalk NG to DeviceNet (male) adaptor cable 1.5 m (4.92 ft) (part number: **A06046**).

6. NMEA 0183 stripped-end (2-wire) to SeaTalk NG adapter cable 1 m (3.3 ft) (part number: **A06071**). Used to connect an NMEA 0183 VHF radio to the SeaTalk NG backbone via the NMEA 0183 to SeaTalk NG converter.

7. SeaTalk NG (male) to DeviceNet (female) adaptor (**A06082***).

8. SeaTalk NG (female) to DeviceNet (male) adaptor (**A06083***).

9. SeaTalk NG (male) to DeviceNet (female) elbow (right-angled) adaptor (**A06084***).

10. DeviceNet (female) to stripped-end adaptor cable (0.4 m (1.3 ft)) (part number: **E05026**).

11. DeviceNet (male) to stripped-end adaptor cable (0.4 m (1.3 ft)) (part number: **E05027**).

Important:
* Do NOT connect the A06082, A06083, or A06084 adaptors directly to a backbone. Only connect as part of a **spur** connection between backbone and device.

Appendix A Supported NMEA 2000 PGN list

Administration PGNs

- **59392** — ISO Acknowledge (Receive / Transmit)
- **59904** — ISO Request (Receive)
- **60928** — ISO Address Claim (Receive / Transmit)
- **126208** — NMEA — Request, Commanded, Acknowledged Group Function (Receive / Transmit)
- **126464** — PGN Transmit and Receive List (Receive / Transmit)
- **126996** — Product Information (Receive / Transmit)

Raymarine® provides field programmability of the Device and System Instances within PGN 60928 which can be commanded via use of PGN 126208 as required by the latest *[NMEA 2000]* standard.

Data PGNs

- **126992** — System Time (Receive / Transmit)
- **126993** — Heartbeat (Receive / Transmit)
- **127237** — Heading/Track Control (Receive)
- **127245** — Rudder (Receive / Transmit)
- **127250** — Vessel Heading (Receive)
- **127251** — Rate of Turn (Receive)
- **127257** — Attitude (Receive)
- **127258** — Magnetic Variation (Receive / Transmit)
- **128259** — Speed, (Receive)
- **128267** — Water Depth (Receive)
- **128275** — Distance Log (Receive)
- **129025** — Position, Rapid Update (Receive)
- **129026** — COG & SOG, Rapid Update (Receive)
- **129029** — GNSS Position Data (Receive)
- **129033** — Time & Date (Receive)
- **129044** — Datum (Receive / Transmit)
- **129283** — Cross Track Error (Receive)
- **129284** — Navigation Data (Receive)
- **129291** — Set & Drift, Rapid Update (Receive)
- **130306** — Wind Data (Receive)
- **130310** — Environmental Parameters (Receive)
- **130311** — Environmental Parameters (Receive)
- **130576** — Small Craft Status (Receive)
- **130577** — Direction Data (Receive)

Appendix B Document change history

Documentation for current products is regularly updated to ensure accuracy and reflect changing product features and / or specifications. Changes made to this document since its first release are listed below.

Document number:	Document name:
87424	p70s and p70Rs Installation Instructions

Changes:

Revision	Date	Applicable software version(s)
03	October 2025	v3.13

- Changed connection to compatible autopilot systems to refer to SeaTalk 1 to SeaTalk NG adapter cable instead of the SeaTalk 1 to SeaTalk NG Converter.
- Added autopilot ACU power connection for SeaTalk NG.
- Added Document change history.

Changes:

Revision	Date	Applicable software version(s)
02	September 2025	v3.13

- Updated layout and format to latest standards.

Changes:

Revision	Date	Applicable software version(s)
01	May 2021	v3.09

- First public release.

Note:
This document (87424) replaces the “installation” details contained in another document (81365), which is now obsolete.

Index

A

Accessories
- SeaTalk NG adaptor cables 59
- SeaTalk NG backbone cables 58
- SeaTalk NG cables 56
- SeaTalk NG connectors 58
- SeaTalk NG kits 56
- SeaTalk NG Power cables 58
- SeaTalk NG spur cables 57

Applicable documents 11, 40, 43
Applicable products 13
Auto 42
Auto Turn 42
Autopilot systems 13
AutoTack 42–43

B

Backbone length,
- SeaTalk NG 35

Bezel removal 23
Buttons 42

C

Cable
- Bend radius 27
- Protection 27
- Routing 27
- Security 27
- Strain relief 27

Cleaning 45
- Screen 45

combination button presses 42
Commissioning 11, 40, 43
Connections
- Battery 37
- DeviceNet 28
- Distribution panel 36
- Overview 28
- Power 33, 35, 38
- Power connections
  - Power distribution 36
- SeaTalk 1 28
- SeaTalk NG 28, 30

Controls 42

D

Declaration of Conformity 8
Dimensions 18
Distribution panel connection 36
Document history 62
Documentation 11, 40, 43
- Installation instructions 11
- Mounting template 11
- Operation instructions 11

E

Electromagnetic Compatibility 20
EMC, *See* Electromagnetic Compatibility
Evolution 13

F

Fuse requirement 33

I

Inline fuse 33
Interference
- RF 21

K

Keypad fitting 25
Keypad removal 23

L

Load equivalency number 35
Location requirements 20
  Display viewing angle 20

M

Maintenance 45
Mounting 24
Mounting templates 11

N

Network length,
  SeaTalk NG 35
NMEA 2000 61
  LEN 35

O

Operation 11, 40, 43

P

Parts supplied 16
PGNs 61
Power
  Battery connection 37
  Distribution panel 36
  Fuses 33
  Sharing a breaker 36
Power cable extension 34, 37
Power connection point 35
Power troubleshooting 47
Product dimensions 18
Product documentation 11, 40, 43
Product loading 35
Product overview 13
Product recycling (WEEE) 9
Product support 53

R

Radio Frequency (RF) interference 21
Rotary controller 42
Routine checks 45

S

SeaTalk connection 31
SeaTalk NG 28, 31, 36
  Adaptor cables 59
  Backbone cables 58
  Connectors 58
  Kits 56
  LEN 35
  Load equivalency number 35
  Power 33, 35, 38
  Power cables 34, 58
  Spur cables 57
  System loading 35
SeaTalk NG cables 56
SeaTalk NG system 30
Service Center 53
SmartPilot 13
Software updates 13–14
SPX 13
Standby 42
Support forum 54
Suppression ferrite fitting 28

T

Technical specification
  conformance 51
  environmental 51
  power 51
Technical support 53–54
Tools 23
Training courses 54
Troubleshooting 47

U

Upgrading, software 13

W

Warranty 9, 53
WEEE Directive 9