Raymarine®

RAY53 / RAY63 / RAY73

Installation & Operation Instructions

Document number: 81381 (Rev 9) | English (en-US) | Date: 04-2026 | Applicable software version: v2.09

Legal notices

Trademark and patents notice

Raymarine®, **Tacktick®**, **Pathfinder®**, **Clear Pulse®**, **Truzoom®**, **SeaTalk®** , **SeaTalk HS™**, **SeaTalk NG™**, and **MicroNet™**, are registered or claimed trademarks of Raymarine UK Ltd.
FLIR®, **Fishidy®**, **Fishing Hot Spots®**, **YachtSense™** , **DockSense®**, **RangeFusion™**, **DownVision®** , **SideVision®**, **RealVision®**, **HyperVision™**, **Wi-Fish®**, **Dragonfly®**, **Element®**, **Quantum®**, **Cyclone™**, **Alpha™**, **Axiom®**, **Infrared Everywhere**, **The World's Sixth Sense** and **ClearCruise®** are registered or claimed trademarks of Teledyne FLIR LLC.
All other trademarks, trade names, or company names referenced herein are used for identification only and are the property of their respective owners.
This product is protected by patents, design patents, patents pending, or design patents pending.

Fair Use Statement

You may print no more than three copies of this manual for your own use. You may not make any further copies or distribute or use the manual in any other way including without limitation exploiting the manual commercially or giving or selling copies to third parties.

Content notice

Please ensure that you have obtained this document only from Raymarine, and that it is the **latest** available version.
There are numerous third-party Internet websites (such as *www.manualslib.com*) hosting Raymarine product manuals. These websites are not authorized by Raymarine to do so, and are often hosting illegitimate or older versions of Raymarine product manuals, which may contain inaccurate or misleading information.
To obtain the latest official documentation for a Raymarine product, please visit the official Raymarine website: www.docs.raymarine.com

Artificial Intelligence (AI) content notice

There are numerous third-party **Artificial Intelligence** (AI) services available to the public, which are capable of providing a summary or transcription of the information provided by official Raymarine publications or websites, either in written or audio/video formats. These services may alter, supplement, or convey the original information provided by Raymarine in inaccurate or misleading ways.
Please ensure that you have obtained this document only from Raymarine, and that it is the **latest** available version.

English (en-US)
Document number: 81381 (Rev 9)

CONTENTS

CHAPTER 1 IMPORTANT INFORMATION..... 12
Safety warnings.....12
Certified Installation 12
Product warnings.....12
Regulatory notices.....13
Compliance Statement (Part 15.19) 13
FCC Interference Statement (Part 15.105 (b)) 13
Innovation, Science and Economic Development Canada (ISED) 13
Licensing 14
Water ingress 14
Disclaimer.....14
Declaration of Conformity.....14
PSTI Compliance.....15
Product disposal.....15
Warranty policy and registration.....15
IMO and SOLAS.....15
Technical accuracy 15
Publication copyright.....15

CHAPTER 2 DOCUMENT AND PRODUCT INFORMATION 16
2.1 Applicable products 17
2.2 Applicable software version.....17
2.3 Product documentation 18
SeaTalk NG documentation.....18
2.4 Printed (hardcopy) product manuals.....18
2.5 Document illustrations.....18
2.6 Document conventions.....19

CHAPTER 3 PRODUCT AND SYSTEM OVERVIEW..... 20
3.1 Product overview.....21
3.2 Required additional components.....21
3.3 Optional additional components.....21
Extension cables 21
3.4 Optional wireless components 22
3.5 Compatible Raymarine® MFDs 22
3.6 Incompatible MFDs.....22
3.7 Software updates.....23
Checking software versions.....23

CHAPTER 4 LICENSING..... 24
4.1 VDES, IRR 2020 and BIPT Requirements.....25
VDES Overview.....25
VDES applicability 25
VDES and IRR 2020 requirements.....26
BIPT Requirements (Belgium only) 26
4.2 Licensing 26
USA licensing requirements 26
Canada licensing requirements.....27
Europe licensing requirements 27
Rest of World licensing requirements 29
Additional information – Ray53 29
Additional information – Ray63 29
Additional information – Ray73 29

Additional information - wireless handset....30
Additional information - wireless charging holster....30
Additional information - wireless hub....30
Additional information - wireless speaker....30
4.3 Obtain MMSI (Maritime Mobile Service Identity) number....31
4.4 Automatic Transmitter Identification System (ATIS)....31

CHAPTER 5 PARTS SUPPLIED....32
5.1 Parts supplied – Ray53....33
5.2 Parts supplied – Ray63 / Ray73....33

CHAPTER 6 PRODUCT DIMENSIONS....35
6.1 Product dimensions — Ray53....36
6.2 Product dimensions — Ray63 / Ray73....36
6.3 Product dimensions — Fistmic....37
6.4 Product dimensions — Wired handset (Raymic)....38
6.5 Product dimensions — speakers....38
6.6 Product dimensions — Wireless hub....39
6.7 Product dimensions — Wireless handset and holster....39

CHAPTER 7 LOCATION REQUIREMENTS....40
7.1 Warnings and cautions....41
7.2 General location requirements....41
Ventilation requirements....41
Water ingress....41
Mounting surface requirements....41
Cable routing requirements....41
Electrical interference....42
Power supply....42
RF interference....42
Compass safe distance....42
EMC installation guidelines....42
Suppression ferrites....43
Connections to other equipment....43
7.3 GNSS (GPS) location requirements....43
7.4 External GNSS (GPS) antenna location requirements....44
7.5 Antenna mounting and EME exposure....44
7.6 Multiple antenna installations....44
7.7 Loud hailer location requirements....44
7.8 Wireless product location requirements....44
Wireless location requirements for optimum performance....44
Pre-installation site survey....45

CHAPTER 8 CABLES AND CONNECTIONS — GENERAL INFORMATION....47
8.1 General cabling guidance....48
Cable types and length....48
Cable routing and bend radius....48
Strain relief....48
Circuit isolation....48
Cable shielding....49
Connections to other equipment....49
Dust caps....49
Bare-ended wire connections....49
8.2 Connections overview — Ray53....49

8.3 Connections overview — Ray63 / Ray73 50
Primary and secondary station connectors 50
CHAPTER 9 MOUNTING..... 51
9.1 Tools required.....52
9.2 Mounting options 52
9.3 Bracket mounting.....52
9.4 Panel mounting — Ray53.....53
Removing the mounting hole covers 53
Drilling out the mounting holes.....53
Panel mounting 54
9.5 Panel mounting — Ray63 / Ray73 55
Drilling out the mounting holes.....55
Panel mounting 55
Attaching the front bezel.....56
9.6 Fistmic mounting 56
9.7 Wired handset mounting using the holster 57
9.8 Wired and wireless speaker mounting.....57
9.9 Pass-through panel kit mounting.....58
9.10 Mounting the wireless hub 59
Antenna orientation.....60
Installing the wireless hub antenna extension accessory 60
9.11 Mounting the charging holster for the wireless handset.....61
CHAPTER 10 NETWORK CONNECTIONS 62
10.1 Connections overview — Ray53 63
10.2 Connections overview — Ray63 / Ray73.....63
Primary and secondary station connectors 64
10.3 Connecting a VHF antenna.....64
10.4 GNSS (GPS) antenna connection 65
10.5 Passive speaker connection 65
10.6 Fistmic connection (Ray63 / Ray73 only) 65
10.7 Secondary handset station (Ray63 / Ray73 only) 66
Wired handset extension cables 66
Connecting handsets and cables 67
10.8 Wireless hub connection (Ray63 / Ray73 only) 67
10.9 Wireless handset connections (Ray63 / Ray73 only).....67
CHAPTER 11 NMEA 0183 CONNECTIONS..... 68
11.1 NMEA 0183 connection 69
CHAPTER 12 NMEA 2000 CONNECTION..... 70
12.1 SeaTalk NG / NMEA 2000 connection 71
Connecting SeaTalk NG cables 71
CHAPTER 13 LOUD HAILER CONNECTION 72
13.1 Loud hailer connection (Ray73 only) 73
CHAPTER 14 POWER CONNECTIONS..... 74
14.1 Power connection 75
14.2 In-line fuse and thermal breaker ratings 75
14.3 Power distribution 75
14.4 Power cable extension (12 V systems) 77
14.5 Wireless handset charging holster – power connection (Ray63 / Ray73 only) 78
In-line fuse and thermal breaker ratings.....78

14.6 Wireless speaker – power connection (Ray63 / Ray73 only) 78
In-line fuse and thermal breaker ratings....79
CHAPTER 15 GETTING STARTED 80
15.1 Licensing....81
15.2 General radio operating rules....81
15.3 Controls and interface 81
15.4 Handset controls....82
15.5 Powering the unit on 83
Powering the handset 83
15.6 Powering the unit off 83
15.7 Homescreen overview....84
Status bar symbols 84
Main menu overview....85
15.8 Shortcut list 87
Adjusting Brightness and Contrast 87
15.9 Shared Brightness 87
Enabling Shared Brightness 88
15.10 Initial startup 88
15.11 Accessing the menu 89
15.12 Selecting a language 89
15.13 Switching on the AIS receiver....89
15.14 Selecting a network type....89
15.15 Entering your MMSI number 90
15.16 Entering your ATIS ID 91
Enabling and disabling ATIS mode....92
15.17 Changing the radio region....92
15.18 Switching between high and low transmit power 93
15.19 GNSS (GPS) set up....93
Enabling and disabling the internal GNSS (GPS) 93
Switching between internal and external antenna 93
Manual GPS source missing or no position data 93
Entering position manually 94
Selecting (GNSS) GPS information to display 94
Setting time format and offset....94
15.20 Station priority (Ray63 and Ray73 only) 94
CHAPTER 16 WIRELESS HANDSET STATIONS 95
16.1 Wireless handsets....96
Wireless handset charging 96
16.2 Connecting a wireless handset to the hub 96
Checking the Wireless hub's password 97
Changing your wireless hub's password 97
Changing the hub's wireless channel 97
Changing the Wireless hub's name....98
16.3 Connecting the wireless speaker to the Wireless handset....98
Disconnecting a Wireless speaker 99
16.4 Wireless set-up menu options....99
Wireless hub set-up menu options 99
Wireless handset not connected menu 100
CHAPTER 17 DIGITAL SELECTIVE CALLING (DSC) 101

17.1 Digital Selective Calling (DSC) 102
17.2 Distress calls 103
Making a designated distress call 103
Making a distress call 103
Making a Mayday call 103
Cancelling a distress call before transmission 104
Cancelling a distress call after transmission 104
Receiving a distress call 105
Ignoring a distress call 105
Acknowledging a distress call 106
Manually relaying a distress call 106
Distress relays sent by other stations 106
17.3 Urgency calls 106
Making an urgency call 106
Receiving an urgency call 107
17.4 Safety calls 107
Making a safety call 107
Receiving a safety call 107
17.5 Individual (routine) calls 107
Making an Individual call 108
Receiving an Individual call 108
17.6 Group calls 108
Making a group call 108
Receiving a group call 108
17.7 Position requests 109
Making a position request 109
Responding to a position request 109
Setting automatic response to position requests 109
17.8 Phonebook 109
Adding a Phonebook entry 109
Editing a Ponebook entry 110
Deleting a Phonebook entry 110
17.9 Call logs 110
Accessing the call logs 110
17.10 Test calls 111
Making a Test call 111
Receiving a test call 111
17.11 DSC set-up menu options 111

CHAPTER 18 VHF OPERATIONS 113
18.1 Watch modes 114
Setting Watch mode 114
18.2 Scan Mode 114
Setting Scan mode 114
18.3 Priority channels 114
Switching between priority channels 114
Setting a second priority channel 114
18.4 Sensitivity 115
Switching sensitivity modes 115
18.5 Private channels 115
Selecting a private channel set 115
18.6 Automatic Transmitter Identification System (ATIS) and Marcom-C mode 115
Enabling and disabling ATIS mode 116
18.7 AIS receiver 116
Switching AIS on and off 116

18.8 Set-up menu options 116
Display Set-up menu..... 118
Shared Brightness menu..... 118

CHAPTER 19 HAILER, FOG HORN, AND INTERCOM.....119
19.1 Hailer Fog Intercom menu 120
19.2 Loud hailer 120
Using the hailer 120
19.3 Fog horn 120
Using the fog horn in manual mode..... 121
Using automatic fog horn modes..... 121
Switching off Fog Horn mode..... 121
19.4 Intercom..... 121
Using the intercom..... 121
Responding to the intercom..... 121

CHAPTER 20 MAINTENANCE..... 122
20.1 Maintenance..... 123
Routine checks..... 123
Unit cleaning instructions 123

CHAPTER 21 TROUBLESHOOTING 124
21.1 Troubleshooting 125
Performing a system reset..... 125
System test 125
Checking for RF interference..... 125
21.2 Power up troubleshooting 126
21.3 Audio troubleshooting (transmission / reception)..... 127
Passive speaker troubleshooting 128
21.4 GNSS (GPS) troubleshooting 129
21.5 DSC troubleshooting 130
Obtain MMSI (Maritime Mobile Service Identity) number 130
21.6 AIS troubleshooting (Ray70 / 73 / 91 only) 131
21.7 Wired handset troubleshooting..... 131
21.8 Wireless troubleshooting (Ray63 / 73 / 90 / 91 only)..... 132
LED diagnostic guidance..... 134
LED diagnostics — Wireless (Active) speaker..... 135

CHAPTER 22 TECHNICAL SUPPORT 136
22.1 Raymarine technical support and servicing 137
22.2 Viewing product information..... 138
22.3 Learning resources 138

CHAPTER 23 TECHNICAL SPECIFICATION..... 139
23.1 Technical specification — Ray53..... 140
23.2 Technical specification — Ray63..... 141
23.3 Technical specification — Ray73..... 143
23.4 Technical specification — Wired handset (Raymic) 145
23.5 Technical specification — Wired (Passive) speaker..... 145
23.6 Technical specification — Wireless hub 146
23.7 Technical specification — Wireless handset..... 146
23.8 Technical specification — Wireless handset charging holster..... 146

23.9 Technical specification — Wireless (Active) speaker 147

CHAPTER 24 SPARES AND ACCESSORIES 148

24.1 Accessories 149

24.2 Ray53 / Ray63 / Ray73 spares 149

24.3 SeaTalk NG cables and accessories 150

APPENDIX A NMEA 0183 SENTENCES 155

APPENDIX B NMEA 2000 PGN LIST 156

APPENDIX C LICENSING AND MMSI ISSUING AUTHORITIES 158

APPENDIX D VHF CHANNELS 161

APPENDIX E PHONETIC ALPHABET 177

APPENDIX F PROWORDS 178

CHAPTER 1: IMPORTANT INFORMATION

Safety warnings

Certified Installation

Raymarine recommends certified installation by a Raymarine approved installer. A certified installation qualifies for enhanced product warranty benefits. Contact your Raymarine dealer for further details.

Warning: Product installation and operation

• This product must be installed and operated in accordance with the instructions provided. Failure to do so could result in personal injury or damage to your vessel. It may also cause poor product performance or invalidate the product warranty.

• Raymarine highly recommends certified installation by a Raymarine approved installer. A certified installation qualifies for enhanced product warranty benefits. Register your warranty on the Raymarine website: www.bit.ly/rym-warranty

Warning: Switch off power supply

Ensure that the vessel's power supply is switched OFF before starting to install this product. Do NOT connect or disconnect equipment with the power switched on, unless instructed to do so in this document.

Warning: Potential ignition source

This product is NOT approved for use in hazardous/flammable atmospheres. Do NOT install in a hazardous/flammable atmosphere (such as in an engine room or near fuel tanks).

Warning: Maximum Permissible Exposure (MPE)

For optimal radio performance and minimal human exposure to Radio Frequency (RF) electromagnetic energy, you must ensure that the **antenna** is:

• connected to the radio before transmitting

• located where it will be away from people

• located at least 2.21 meters (7.25 ft) from the radio's main unit.

Failure to observe these guidelines may expose those within the Maximum Permissible Exposure (MPE) radius to RF radiation absorption that exceeds the FCC MPE limit.

It is the radio operator's responsibility to ensure that no person comes within this MPE radius.

Product warnings

Warning: 12 Volt dc only

This product must ONLY be connected to a 12 V dc power source.

Warning: Chassis grounding

Do NOT ground this product using the chassis ground terminal.

Grounding this product to a vessel's RF ground may cause galvanic corrosion.

Warning: VHF Antenna isolation

To prevent galvanic corrosion your VHF antenna must be isolated from any vessel metalwork using a suitable, insulated (e.g. plastic) mounting bracket.

Warning: Positive ground systems

Do NOT connect this unit to a system which has positive grounding.

Warning: FCC Warning (Part 15.21)

Changes or modifications to this equipment not expressly approved in writing by Raymarine UK Ltd could violate compliance with FCC rules and void the user's authority to operate the equipment.

Caution: Perform regular radio checks

Perform regular radio checks when using your vessel, as recommended in radio training and certification schemes and radio equipment rules of use.

Caution: Ensure proper radio use

Under no circumstances should a DSC distress alert be sent from your radio for test purposes. Such action is a violation of rules of use for radio equipment, and can result in heavy fines.

Regulatory notices

Compliance Statement (Part 15.19)

This device complies with Part 15 of the FCC Rules. Operation is subject to the following two conditions:

1. This device may not cause harmful interference.
2. This device must accept any interference received, including interference that may cause undesired operation.

FCC Interference Statement (Part 15.105 (b))

This equipment has been tested and found to comply with the limits for a Class B digital device, pursuant to Part 15 of the FCC Rules.

These limits are designed to provide reasonable protection against harmful interference in a residential installation. This equipment generates, uses, and can radiate radio frequency energy and, if not installed and used in accordance with the instructions, may cause harmful interference to radio communications. However, there is no guarantee that interference will not occur in a particular installation. If this equipment does cause harmful interference to radio or television reception, which can be determined by turning the equipment off and on, the user is encouraged to try to correct the interference by one of the following measures:

1. Reorient or relocate the receiving antenna.
2. Increase the separation between the equipment and receiver.
3. Connect the equipment into an outlet on a circuit different from that to which the receiver is connected.
4. Consult the dealer or an experienced radio / TV technician for help.

IEEE and ICNIRP exposure limits

This radio complies with IEEE and ICNIRP exposure limits for uncontrolled RF exposure environments.

The radio operates up to a duty cycle of 50%, and is authorized by FCC in the United States of America, and ISED in Canada.

Innovation, Science and Economic Development Canada (ISED)

This device complies with License-exempt RSS standard(s).

Operation is subject to the following two conditions:

1. This device may not cause interference; and
2. This device must accept any interference, including interference that may cause undesired operation of the device.

This Class B digital apparatus complies with Canadian ICES-003(B) / NMB-003(B).

Innovation, Sciences et Développement économique Canada (Français)

Cet appareil est conforme aux normes d'exemption de licence RSS.

Son fonctionnement est soumis aux deux conditions suivantes:

1. cet appareil ne doit pas causer d'interférence, et
2. cet appareil doit accepter toute interférence, notamment les interférences qui peuvent affecter son fonctionnement.

Cet appareil numérique de la classe B est conforme à la norme NMB-003 du Canada.

Licensing

Prior to using this product for the first time, please check your national requirements for both operator and equipment licensing.

Important:
It is your responsibility to determine whether a license is required in your area before operating this equipment.

In many regions, the following authorizations are required from the relevant regulatory authority:

1. Ship Station VHF license;
2. Operator's license;
3. MMSI (Maritime Mobile Service Identity) number.

Licenses are typically issued by the National Regulatory Authorities (NRAs) in each country.

For a list of license and MMSI issuing authorities, refer to:
p.158 — Licensing and MMSI issuing authorities

Important:
It may also be necessary to obtain an Operator's license before an MMSI number can be obtained for your vessel. The DSC functions of the radio will not work without a valid MMSI number. For more information, refer to:
p.31 — Obtain MMSI (Maritime Mobile Service Identity) number

Water ingress

Water ingress disclaimer

Although the waterproof rating capacity of this product meets the stated water ingress protection standard (refer to the product's *Technical Specification*), water intrusion and subsequent equipment failure may occur if the product is not installed correctly or subjected to high-pressure washing. Raymarine will not warrant products subjected to high-pressure washing.

Disclaimer

Raymarine does not warrant that this product is error-free or that it is compatible with products manufactured by any person or entity other than Raymarine.

Raymarine is not responsible for damages or injuries caused by your use or inability to use the product, by the interaction of the product with products manufactured by others, or by errors in information utilized by the product supplied by third parties.

Third-party hardware, such as converters, adapters, routers, switches, Access Points etc., provided by third parties, may be made available directly to you by other companies or individuals under separate terms and conditions, including separate fees and charges. Raymarine UK Ltd or its affiliates have not tested or screened the third-party hardware.

Raymarine has no control over, and is not responsible for:

- (a) the content and operation of such third-party hardware; or:
- (b) the privacy or other practices of such third-party hardware.

The fact that Raymarine's documentation may make reference to such third-party hardware does not indicate any approval or endorsement of any such third-party hardware. Raymarine may reference such third-party hardware only as a convenience.

THIS INFORMATION IS MADE AVAILABLE BY Raymarine ON THE BASIS THAT YOU EXCLUDE TO THE FULLEST EXTENT LAWFULLY PERMITTED ALL LIABILITY WHATSOEVER FOR ANY LOSS OR DAMAGE HOWSOEVER ARISING OUT OF THE USE OF THIS INFORMATION OR RELIANCE UPON THIS INFORMATION.

Raymarine does not exclude **Raymarine**'s liability (if any) to you for personal injury or death resulting from **Raymarine UK Ltd** negligence, for fraud or for any matter which it would be illegal to exclude or to attempt to exclude.

Declaration of Conformity

Declaration of Conformity for product sold into European Union (EU) member state regions, and the United Kingdom (UK).

Raymarine UK Ltd declares that the radio equipment type products listed below are in conformity with the relevant sections of the listed designated standards and / or other normative documents:

- Ray53 DSC VHF Radio, part number: E70524
- Ray63, DSC VHF Radio, part number: E70516
- Ray73, DSC VHF Radio, part number: E70517

Region	Standard	Mark
UK	EMC Regulations 2016	UK CA
EU	Radio Equipment Directive 2014/53/EU	CE

The original Declaration of Conformity certificate may be viewed on the relevant product page at www.bit.ly/rayvhfseries2-docs

PSTI Compliance

For products sold into the United Kingdom (UK), use the following link to obtain the product's Statement of Compliance with the *Product Security and Telecommunications Infrastructure* (PSTI) Regulations:

Visit the following web address and enter the product's model name or number (SKU) into the provided search field:

- www.bit.ly/rym-sec-com

Product disposal

Dispose of this product in accordance with the WEEE Directive.

The Waste Electrical and Electronic Equipment (WEEE) Directive requires the recycling of waste electrical and electronic equipment which contains materials, components and substances that may be hazardous and present a risk to human health and the environment when WEEE is not handled correctly.

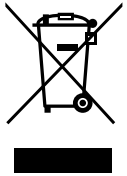

Equipment marked with the crossed-out wheeled bin symbol indicates that the equipment should not be disposed of in unsorted household waste. Local authorities in many regions have established collection schemes under which residents can dispose of waste electrical and electronic equipment at a recycling center or other collection point. For more information about suitable collection points for waste electrical and electronic equipment in your region, refer to the Raymarine website: https://bit.ly/rym-recycling

Warranty policy and registration

Visit the Raymarine website to **read the latest warranty policy**, and **register** your product's warranty online: www.bit.ly/rym-warranty

It is important that you register your product to receive full warranty benefits. Your product package includes a barcode label indicating the serial number of the unit. This serial number is also provided on a label affixed to the product itself. You will need this serial number when registering your product online.

IMO and SOLAS

The equipment described within this document is intended for use on leisure marine boats and workboats NOT covered by International Maritime Organization (IMO) and Safety of Life at Sea (SOLAS) Carriage Regulations.

Technical accuracy

To the best of our knowledge, the information in this document was correct at the time it was produced. However, Raymarine cannot accept liability for any inaccuracies or omissions it may contain. In addition, our policy of continuous product improvement may change specifications without notice. As a result, Raymarine cannot accept liability for any differences between the product and this document. Please check the Raymarine website to ensure you have the most up-to-date version(s) of the documentation for your product: www.docs.raymarine.com

Publication copyright

Copyright ©2026 Raymarine UK Ltd. All rights reserved. No parts of this material may be copied, translated, or transmitted (in any medium) without the prior written permission of Raymarine UK Ltd.

CHAPTER 2: DOCUMENT AND PRODUCT INFORMATION

CHAPTER CONTENTS

- 2.1 Applicable products — page 17
- 2.2 Applicable software version — page 17
- 2.3 Product documentation — page 18
- 2.4 Printed (hardcopy) product manuals — page 18
- 2.5 Document illustrations — page 18
- 2.6 Document conventions — page 19

2.1 Applicable products

This document is applicable to the following products:

Ray 53

Product	Features
Ray53 (E70524):	• SeaTalk NG / NMEA 2000 • NMEA 0183 • Built-in GNSS (GPS and GLONASS) receiver • Passive speaker connection

Ray63 / Ray73

Product	Features
Ray63 (E70516)	Same as Ray53, plus: • Support for up to 2 Wired handset stations, or • One wired handset station and up to 2 Wireless handset stations
Ray73 (E70517)	Same as Ray63, plus: • Built-in AIS receiver • Loud hailer connection

2.2 Applicable software version

Product software is updated regularly to add new features and improve existing functionality.

This document has been updated to reflect the following Ray53 / 63 / 73 software version:

Applicable software version:
v2.09

Check the website for the latest software:

Ray53 / 63 / 73 software download link
https://bit.ly/rayvhfseries2-download

2.3 Product documentation

The following documentation is applicable to your product:

Document	Description
81381	Ray53 / Ray63 / Ray73 installation and operation instructions (this document).
87218	Ray53 mounting template.
87219	Ray63 / Ray73 mounting template.

These documents are available to download from the following location:

Ray53 / 63 / 73 documents download link
https://bit.ly/rayvhfseries2-docs

SeaTalk NG documentation

Document	Description
81300	SeaTalk NG reference manual: Planning and connection of systems based around the SeaTalk NG network.
87121	SeaTalk 1 to SeaTalk NG converter installation instructions: Installation and connection of the SeaTalk 1 to SeaTalk NG converter.

2.4 Printed (hardcopy) product manuals

All applicable user documentation for your product is available on our website to view or download free-of-charge. If you would prefer a **printed** (hardcopy) product manual, a Print Shop service is available, enabling you to purchase a high-quality, professionally-printed manual for your product, delivered directly to your door.

Printed manuals are ideal for keeping onboard your vessel, as a useful source of reference whenever you need assistance with your product.

Printed manuals are provided by a third-party (**Lulu Press**).

To order a printed manual, use the Lulu Press website link provided below. The manual will then be printed and delivered to the address you specify. Once an order is placed, it typically takes Lulu Press approximately 5 to 10 working days to print and deliver a printed manual.

Supplier	How to purchase
lulu	1. Click the following link. 2. In the displayed search field, enter the required document number, e.g. *81406* www.bit.ly/rym-printshop

Note:

- Accepted methods of payment for printed manuals are credit cards and PayPal.
- Printed manuals can be shipped worldwide.

2.5 Document illustrations

While every effort is made to ensure that the illustrations provided in this publication accurately reflect the final released product, due to editorial and production lead times, your product — and if applicable — its user interface, may differ slightly from the illustrations provided in this document, depending on product variant and date of manufacture.

All images are provided for illustration purposes only.

2.6 Document conventions

The following conventions are used throughout this document.

Formatting of user interface menus and settings.

References to menus, setting options and physical buttons are formatted using square brackets [].
Examples:

- “You can select your desired cartography from the *[Cartography selection]* menu.”
- “MFD apps are accessed from the *[Homescreen]*.”
- “Press the *[Home]* button to return to the Homescreen.”

Procedures for performing specific tasks using the product’s user interface.

The term “**Select**” is used to refer to the action of:

- Touchscreen control — using your finger to select a menu option or item on the screen.
- Physical buttons — Highlighting an item using the navigational controls and confirming the selection by pressing the *[OK]* button.

Examples:

- “Select *[Ok]* to confirm your selection.”
- “Select *[Set-up]*.”

Procedures for navigating menu hierarchies.

Menu hierarchies are used in this document to provide a quick summary on how to access a particular function or menu option.
Examples:

- “The internal sonar module is disabled using the Fishfinder app menu: *[Menu > Set-up > Sounder Set-up > Internal Sounder]*.”
- “The internal GPS can be switched off from the GPS settings menu: *[Homescreen > Status area > Satellites > Settings > Internal GPS]*.”

CHAPTER 3: PRODUCT AND SYSTEM OVERVIEW

CHAPTER CONTENTS

- 3.1 Product overview — page 21
- 3.2 Required additional components — page 21
- 3.3 Optional additional components — page 21
- 3.4 Optional wireless components — page 22
- 3.5 Compatible Raymarine® MFDs — page 22
- 3.6 Incompatible MFDs — page 22
- 3.7 Software updates — page 23

3.1 Product overview

The Ray53, Ray63 and Ray73 are 12 V dc, Class D Digital Selective Calling (DSC) VHF radios. DSC enables you to make a selective call to a specific radio, and to transmit and receive position information to and from the selected radio. DSC also allows transmission of a distress alert to all radios within range at the touch of a button. Once a DSC request is sent and acknowledged, voice communication is carried out on the channel chosen by the caller. The radio can transmit and receive on all available US, Canadian, International and Private marine VHF channels.

Your product includes the following features:

- Built-in GNSS (GPS) receiver with internal antenna and an external antenna connection.
- Built-in GNSS (GPS) receiver can be used as a source of GNSS position data for other devices in your network.
- Networkable: Connect to NMEA 2000 / SeaTalk NG or NMEA 0183.
- Expandable:
  - Add an optional passive speaker (all variants).
  - Add a second fully-functional wired handset station (Ray63 / Ray73 only), or:
  - Connect the optional Wireless hub to the second station connector, allowing up to 2 fully-functioning wireless handset stations.
  - By adding an optional Loud Hailer (M95435), the Ray73 can be used as a fog horn or loud public address (PA) system.
- Built-in AIS receiver (Ray73 only).

3.2 Required additional components

Your product requires a VHF antenna.

Part number	Description
N/A	Third-party 50 Ω VHF antenna

3.3 Optional additional components

GNSS / GPS antenna

You can improve the performance of your radio's built-in GNSS (GPS) receiver using an external antenna.

Part number	Description
A80288	Passive GNSS (GPS) antenna

Ray53

Part number	Description
A80542	Wired speaker (passive)

Ray63 / Ray73

Part number	Description
A80542	Wired speaker (passive)
A80289	Wired handset (Raymic)

Ray73

Part number	Description
M95435	Loud Hailer

Extension cables

The following extension cables are available:

Part number	Description
A80291	Wired handset extension cable 5 m (16.4 ft)
A80292	Wired handset extension cable 10 m (32.8 ft)
A80290	Wired handset extension cable 15 m (49.2 ft)
A80297	Wired handset adaptor cable with male RCA audio (400 mm 1.3 ft)

3.4 Optional wireless components

Your radio supports connection of wireless handsets and speakers via a wireless hub, enabling creation of additional fully functional, wireless handset stations.

The following wireless components are available:

Part number	Component	Description
A80540	Wireless hub	Allows connection of up to 2 Wireless handsets.
R70739	Wireless hub adaptor	Allows Wireless hub connection to Ray63 / Ray73 radios.
A80544	Wireless handset (including holster)	Wireless handset with inductive charging and wireless speaker connection.
A80543	Wireless speaker (Active)	Connects to the Wireless handset.

3.5 Compatible Raymarine® MFDs

DSC distress messages can be displayed on Raymarine® MFDs / Chartplotters when the radio is connected via SeaTalk NG to one of the following MFDs / Chartplotters:

Compatible Raymarine MFDs	Required MFD software version
Axiom 2 Series: Axiom 2 Axiom 2 Pro Axiom 2 XL	• *Initial release or later*
Axiom Series: Axiom, Axiom +, Axiom Pro, Axiom XL	• *Initial release or later*
eS Series eS75, eS77, eS78, eS97, eS98, eS127, eS128	• *Initial release or later*
gS Series gS95, gS125, gS165, gS195	• *Initial release or later*
"New" e Series e7, e7D, e95, e97, e125, e127, e165	• *Initial release or later*
"New" c Series c95, c97, c125, c127	• *Initial release or later*
"New" a Series a67, a68	• *Initial release or later*
E-Series Widescreen E90W, E120W, E140W	• *Initial release or later*
C-Series Widescreen C90W, C120W, C140W	• *Initial release or later*
G-Series GPM400	• *Initial release or later*
"Classic" E-Series E80, E120	• *Initial release or later*
"Classic" A-Series A50, A50D, A57D, A70, A70D	• *Initial release or later*
"Classic C-Series C70, C80, C120	• *Initial release or later*

3.6 Incompatible MFDs

This product is NOT compatible with the following legacy Raymarine® multifunction displays.

Incompatible Raymarine MFD Series	Required MFD software version
"Classic" A-Series A60, A65	• **Not compatible**

3.7 Software updates

Raymarine® periodically releases software updates for its products. These updates provide new features, current feature enhancements and bug fixes which improves product performance and usability.

Check the Raymarine® website regularly to ensure you have the latest software for your products: www.raymarine.com/software

The software update process requires a compatible MFD, powered by LightHouse™ 2 release 13.37 or above, or LightHouse™ 3 version LH3.2 or above.

- Please refer to the operation instructions for your MFD / operating system version for details on how to perform the software update, alternatively refer to the instructions provided on the software download area for your product on the Raymarine website: www.raymarine.com/software.
- The MFD used to perform the software update must be the designated Data master and be connected / networked to the product being updated.
- If you are in any doubt as to the correct procedure for updating your product software, please refer to your local authorized dealer or Raymarine® technical support for assistance.

Caution: Installing software updates

- The software update process is carried out at your own risk. Before initiating the update process ensure you have backed up any important files.
- Ensure that the product(s) has a reliable power supply and that the update process is not interrupted.
- Damage caused by an incomplete update is not covered by Raymarine warranty.
- By downloading the software update package, you agree to these terms.

Checking software versions

You can check the software version of your radio and connected components.

From the Homescreen:

1. Select *[Menu > Set-up > Maintenance > About this unit]*.
2. Scroll down.

   Software versions of connected components are displayed.

CHAPTER 4: LICENSING

CHAPTER CONTENTS

- 4.1 VDES, IRR 2020 and BIPT Requirements — page 25
- 4.2 Licensing — page 26
- 4.3 Obtain MMSI (Maritime Mobile Service Identity) number — page 31
- 4.4 Automatic Transmitter Identification System (ATIS) — page 31

4.1 VDES, IRR 2020 and BIPT Requirements

Marine VHF radio operators and owners need to be aware of the following regulations restricting the use of certain VHF channels / frequencies in certain regions, from: 1 January 2024.

Note:

- **VEDS** (*VHF Digital Data Exchange System*)
- **IRR 2020** (*International Radio Regulations*)
- **BIPT** (*Belgian Institute for Postal Services and Telecommunications*)

VDES Overview

VDES refers to a (relatively) recent development in VHF communications, which allows certain VHF channels to be used for the sending and receiving of digital data, instead of voice communications. As VDES combines multiple existing VHF channels, a number of changes are required to existing VHF channels, in order to prevent interference. However, while the changes implemented in the software update described in this document make your Class D VHF radio VDES-compliant (in the **Europe CEPT** band), the radio does not gain any new VDES functionality as a result of this update.

In terms of VDES implementation, in 2015, the ITU World Radio Communication Conference (WRC-15) decided to re-allocate VHF channels which had previously been in use for analogue voice communications, for VDES. At this time, only European CEPT regions have agreed to implement this change, which is **mandatory from 1 January 2024**, following the *CEPT ECC Decision (19)03*. For more information, refer to: https://docdb.cept.org/download/1452

VDES applicability

The VDES implementation has mixed applicability, **depending on the region in which your Radio operator license applies:**

Region	VDES Applicability	Frequency band to use
European CEPT countries	Anyone using a VHF radio in these European seaways MUST adhere to the channel usage regulations described below, **by 1 January 2024.**	**EUR (Europe CEPT)**
USA & Canada	NOT adopting VDES at this time. Anyone using a VHF radio exclusively in these regions only does not need to comply with the VDES, IRR 2020, or BIPT regulations, at this time.	• **USA** • **CAN (Canada)**
Other countries (incl. UK)	Not yet formally adopted VDES. VHF radio users in these regions should follow developments published on the respective Government websites.	**INT (International)**

Note:
To ensure your VHF radio is compliant to these requirements, new channel configurations are required, available via a software update:

- **Ray53/63/73:** *v2.06 (app) / v2.27 (boot)*
- **Ray90/91:** *v1.59 (app) / v1.09 (boot)*

To obtain the new software, visit the Raymarine® website: www.raymarine.com/software

Important:
If your VHF Radio is currently configured in **MARCOM-C** mode, the software in your Radio MUST be updated by a Raymarine Service Dealer.
This is because any Radio in MARCOM-C mode, once updated to the latest software, will use channels in the INT (International) Channel set, in a non-compliant configuration.

VDES and IRR 2020 requirements

To comply with the VDES & IRR 2020 Regulations, **a software update will provide a new channel configuration:**

Channel(s)	New Configuration
24, 25, 26, 84, 85, 86	• These channels are NOT selectable in the ***EUR*** frequency band. • These channels must NOT be used in the ***INT*** **frequency band, in regions that have adopted VDES.**
27, 28	• These channels **are disabled** in the ***INT*** and ***EUR*** frequency bands (all ATIS modes).
1027, 1028	• These channels **have been added**, for use in the ***INT*** and ***EUR*** frequency bands.

BIPT Requirements (Belgium only)

To comply with the latest BIPT Regulations, **a software update will provide a new channel configuration:**

Channel(s)	New Configuration
96	• This private channel **is disabled.**
(Private channel) 31 ("*Holland*")	• This channel **has been renamed "MARINA", and added as Belgium Private Channel** in the ***INT*** **and** ***EUR*** **frequency bands**, and will also remain private in Holland.

Note:
If your VHF radio is set to the EUR (*Europe CEPT*) Frequency band and ATIS is set to *ON*, you cannot change to the INT (*International*) Frequency band until ATIS is set to *OFF*.

4.2 Licensing

Prior to using this product for the first time, please check your national requirements for both operator and equipment licensing.

Important:
It is your responsibility to determine whether a license is required in your area before operating this equipment.

In many regions, the following authorizations are required from the relevant regulatory authority:

1. Ship Station VHF license;
2. Operator's license;
3. MMSI (Maritime Mobile Service Identity) number.

Licenses are typically issued by the National Regulatory Authorities (NRAs) in each country.

For a list of license and MMSI issuing authorities, refer to:
p.158 — Licensing and MMSI issuing authorities

Important:
It may also be necessary to obtain an Operator's license before an MMSI number can be obtained for your vessel. The DSC functions of the radio will not work without a valid MMSI number. For more information, refer to:
p.31 — Obtain MMSI (Maritime Mobile Service Identity) number

USA licensing requirements

FCC station license requirement

An FCC Ship Radio Station License and Call Sign are not required for most recreational vessels travelling in US waters. However, you must obtain a license if your vessel travels to foreign ports.

Ships that use MF/HF single side-band radio, satellite communications, or telegraphy must be licensed by the FCC.

For more information, refer to the FCC website (**Licensing** tab): https://www.fcc.gov/bureau-divisions/mobility-division/ship-radio-stations#block-menu-block-4

Canada licensing requirements

You do not need a license to operate this product within the sovereign waters of Canada or the United States of America (USA).

You will need a license to operate this radio outside of Canada or the USA. To obtain licensing information, visit the Innovation, Science and Economic Development Canada (ISED) (previously known as Industry Canada) website: https://www.tc.gc.ca/eng/marinesafety/oep-navigation-radiocomms-faqs-1489.htm.

Europe licensing requirements

Before the first use of a VHF radio in countries in Europe, the following authorizations MUST be obtained from the relevant regulatory authority.

- **Ship Station VHF license** — this authorizes the use of two-way VHF communications with other vessels, aircraft and shore stations. This license is applicable to a specific vessel, and is usually valid for the lifetime of the vessel. If you ever sell your vessel in the future, you will need to arrange for the transfer of the Ship Station VHF license to the new vessel owner.
- **Operator's license** — this authorizes an individual operator to conduct two-way VHF communications with other vessels, aircraft and shore stations. For most non-commercial operators, this license is usually referred to as a "Restricted Radiotelephone Operator Permit", or "Restricted Certificate of Competence in Radiotelephone".
- **MMSI (Maritime Mobile Service Identity) number** — a 9 digit number which is sent over a radio frequency channel in order to identify the originating vessel/station. If your vessel already has an MMSI number, the same MMSI number must be used to program your VHF radio. In Europe, the MMSI number can be programmed into the unit by the user. **In some regions, you must obtain a radio operator's licence before an MMSI number will be issued.** In these areas, you can request an MMSI number from the same authority that issues the Operator's license or Ship Station VHF licence.

It is also the radio operator's responsibility to be familiar with all relevant rules and regulations related to radio use. In regions in which a VHF transceiver is compulsory, a current copy of the applicable government rules and regulations must be accessible to the operator.

The following table lists the relevant issuing authority for licences in each region, along with a link to the relevant website. Many authorities allow you to apply for a license online.

Country		Regulatory authority	Website
Austria	AT	Austrian Regulatory Authority for Broadcasting and Telecommunications	http://www.rtr.at
Belgium	BE	Belgian Institute for Postal services and Telecommunications (BIPT)	http://www.bipt.be
Bulgaria	BG	Communications Regulation Commission	http://www.crc.bg
Croatia	HR	Croatian Post and Electronic Communications Agency	http://www.hakom.hr/default.aspx?id=7
Cyprus	CY	Office of Electronic Communications & Postal Regulation	http://www.ocecpr.org.cy/nqcontent.cfm?a_id=767&tt=ocecpr&lang=gr
Czech Republic	CZ	The Czech Telecommunication Office	http://www.ctu.eu/main.php?pageid=178
Denmark	DK	Danish Energy Agency	https://ens.dk/en
Estonia	EE	Estonian Competition Authority	http://www.konkurentsiamet.ee/?lang=en

Country		Regulatory authority	Website
Finland	FI	Finnish Communications Regulatory Authority	http://www.ficora.fi/en
France	FR	Autorité de Régulation des Communications Électroniques et des Postes	http://www.arcep.fr
Germany	DE	Bundesnetzagentur	http://www.bundesnetzagentur.de
Greece	EL	Hellenic Telecommunications and Post Commission	http://www.eett.gr/opencms/opencms/EETT_EN/index.html
Hungary	HU	National Media and Infocommunication Authority	http://www.nmhh.hu
Iceland	IS	Post and Telecom Administration	http://www.pfs.is/default.aspx?cat_id=101
Ireland	IE	Commission for Communications Regulation	http://www.comreg.ie
Italy	IT	Autorità per le Garanzie nelle Comunicazioni	http://www.agcom.it
Lichtenstein	LI	Office for Communications	http://www.llv.li/amtsstellen/llv-ak-english-page.htm
Lithuania	LT	Communications Regulatory Authority	http://www.rrt.lt/en/home.html
Luxembourg	LU	Institut luxembourgeois de régulation	http://www.ilr.public.lu
Latvia	LV	Elektronisko sakaru direkcija	https://www.vases.lv/lv/content/juras-sakaru-atlaujas

Country		Regulatory authority	Website
Malta	MT	Malta Communications Authority	http://www.mca.org.mt
Holland	NL	Autoriteit Consument & Markt	https://www.acm.nl/nl
Norway	NO	Norwegian Communications Authority	http://www.nkom.no
Poland	PL	Prezes Urzędu Komunikacji Elektronicznej	http://www.uke.gov.pl
Portugal	PT	Autoridade Nacional de Comunicações	https://www.anacom.pt
Romania	RO	National Authority for Management and Regulation in Communications of Romania	http://www.ancom.org.ro/en
Slovenia	SI	Agency for communication networks and services of the Republic of Slovenia	http://www.akos-rs.si/akos-ang
Slovakia	SK	Telecommunications Regulatory Authority of the Slovak Republic	http://www.teleoff.gov.sk/index.php?ID=9
Spain	ES	Comisión Nacional de los Mercados y la Competencia	https://www.cnmc.es/en
Sweden	SE	Swedish Post and Telecom Authority	http://www.pts.se
Switzerland	CH	Office fédéral de la communication	http://www.bakom.admin.ch/themen/frequenzen/00689/01563/index.html?lang=fr

Country		Regulatory authority	Website
Turkey	TR	Information And Communication Technologies Authority	http://eng.btk.gov.tr
United Kingdom and Northern Ireland	UK(NI)	OFCOM	http://www.ofcom.org.uk

Rest of World licensing requirements

In many regions, the following authorizations are required from the relevant regulatory authority:

1. Ship Station VHF license;
2. Operator's license;
3. MMSI (Maritime Mobile Service Identity) number.

Licenses are typically issued by the National Regulatory Authorities (NRAs) in each country.

Important:
It is your responsibility to determine whether a license is required in your area before operating this equipment.

Additional information – Ray53

The following additional information is required for completing a license application in Canada and the US.

Additional information	
ISED ID:	4069B-RAY501D
FCC ID:	PJ5–RAY501
FCC Type accepted:	(*) Parts 2, 15 and 80
Output power:	1 watt (low) and 25 watt (high)
Modulation:	FM
Frequency range:	155.500 MHz to 163.275 MHz

Note:
(*) Please be aware that the FCC does not make certificates available for Part 2 Type Approval.

Additional information – Ray63

The following additional information is required for completing a license application in Canada and the US.

Additional information	
ISED ID:	4069B-RAY601D
FCC ID:	PJ5–RAY601
FCC Type accepted:	(*) Parts 2, 15 and 80
Output power:	1 watt (low) and 25 watt (high)
Modulation:	FM
Frequency range:	155.500 MHz to 163.275 MHz

Note:
(*) Please be aware that the FCC does not make certificates available for Part 2 Type Approval.

Additional information – Ray73

The following additional information is required for completing a license application in Canada and the US.

Additional information	
ISED ID:	4069B-RAY701D
FCC ID:	PJ5–RAY701
FCC Type accepted:	(*) Parts 2, 15 and 80
Output power:	1 watt (low) and 25 watt (high)
Modulation:	FM
Frequency range:	155.500 MHz to 163.275 MHz

Note:
(*) Please be aware that the FCC does not make certificates available for Part 2 Type Approval.

Additional information - wireless handset

Additional information	
ISED ID:	4069B–RAY90W
FCC ID:	PJ5–RAY90W
FCC type accepted:	(*) Parts, 2, 15 and 80
Output power:	1. 19 dBm 2. 4dBm
Modulation:	1. MIMO-OFDM/DSSS/CCK 2. GFSK
Frequency:	1. 2412MHz to 2472MHz 2. 2412MHz to 2472MHz

Note:

- ISED previously IC (Industry Canada).
- (*) The FCC does not make available certificates for Part 2 Type Approval.

Additional information - wireless charging holster

Additional information	
ISED ID:	4069B–RAYCGR
FCC ID:	PJ5–RAYCGR
FCC type accepted:	(*) Parts 2, 15 and 80
Output power:	5 watt
Modulation:	QI
Frequency:	110KHz to 205KHz

Note:

- ISED previously IC (Industry Canada).
- * The FCC does not make available certificates for Part 2 Type Approval.

Additional information - wireless hub

Additional information	
ISED ID:	4069B–RAYHUB
FCC ID:	PJ5–RAYHUB
FCC type accepted:	(*) Parts 2, 15 and 80
Output power:	19 dbm
Modulation:	MIMO-OFDM/DSSS/CCK
Frequency:	2412-2472MHz

Note:

- ISED previously IC (Industry Canada).
- (*) The FCC does not make available certificates for Part 2 Type Approval.

Additional information - wireless speaker

Additional information	
ISED ID:	4069B–RAYSPK
FCC ID:	PJ5–RAYSPK
FCC type accepted:	(*) Parts 2, 15 and 80
Output power:	4 dbm
Modulation:	GFSK
Frequency:	2412MHz to 2472MHz

Note:

- ISED previously IC (Industry Canada).
- (*) The FCC does not make available certificates for Part 2 Type Approval.

4.3 Obtain MMSI (Maritime Mobile Service Identity) number

Before commencing installation ensure you have obtained an MMSI number for your vessel.

An MMSI is a 9 digit number which is sent over a radio frequency channel in order to identify the originating vessel/station. If your vessel already has an MMSI number (used for a VHF DSC radio) then the same MMSI number must be used to program your product.

Note:
If an MMSI number is not entered, the DSC functionality of your radio will be disabled.

In the United States of America, the MMSI and Static Data must be entered only by a Raymarine® dealer or other appropriately qualified installer of marine communications equipment on board vessels. The user is NOT authorized to do this.

In some areas, a radio operator licence is required before an MMSI number will be issued. You can request an MMSI number from same agency that issues radio or Ship Radio licences in your area.

In Europe and other parts of the world outside of the United States of America, the MMSI and Static data can be set up by the user.

For further details, refer to the relevant Telecommunications Regulatory Body for your area.

For a list of issuing authorities for licences and MMSI numbers in each region, refer to: **p.158 — Licensing and MMSI issuing authorities**

Warning: MMSI entry

You can only enter a MMSI number once, if you enter the number incorrectly or need to change your MMSI number, the unit will require re-programming by an authorized Raymarine dealer.

4.4 Automatic Transmitter Identification System (ATIS)

Your product includes ATIS functionality for use on the inland waterways of contracting governments of the *"Regional Arrangement on the Radiocommunication Service for Inland Waterways"* — also known as *"RAINWAT"*.

ATIS adds data at the end of radio transmissions that identifies your station. ATIS operation can be turned on or off as needed via the radio's menu.

An ATIS ID can be obtained from the same agency that issues radio operator licenses in your area.

Your ATIS ID should be programed into your product using the instructions provided.

Note:

- Contracting RAINWAT countries include: Austria, Belgium, Bulgaria, Croatia, the Czech Republic, France, Germany, Hungary, Luxembourg, Moldova, Montenegro, the Netherlands, Poland, Romania, Serbia, the Slovak Republic and Switzerland.
- When ATIS is enabled, certain programing steps have been implemented to protect the integrity of the RAINWAT agreement, including the blocking of DSC functions when ATIS is enabled.
- A unique ATIS ID must be entered before ATIS mode can be enabled.
- The ATIS ID can only be entered when the **EUR** channel set is selected.
- **If your VHF radio is set to the EUR (*Europe CEPT*) Frequency band and ATIS is set to *ON*, you cannot change to the INT (*International*) Frequency band until ATIS is set to *OFF*.**

CHAPTER 5: PARTS SUPPLIED

CHAPTER CONTENTS

- 5.1 Parts supplied – Ray53 — page 33
- 5.2 Parts supplied – Ray63 / Ray73 — page 33

5.1 Parts supplied – Ray53

The parts listed below are supplied with the Ray53.

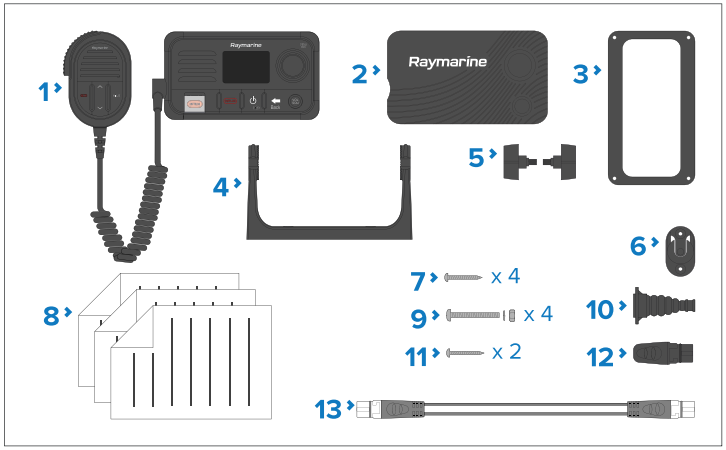

	Description
1	VHF Radio.
2	Sun cover.
3	Panel mount gasket.
4	Mounting bracket (Trunnion).
5	Mounting bracket knobs.
6	Fistmic hook plate.
7	4 x M4x25 screws (For Bracket (Trunnion) mounting).
8	Documentation.
9	4 x M4 nuts, spring washers and M4x25 machine screws (For Panel mounting).
10	Protective antenna boot.
11	2 x M4x12 screws (For Fistmic hook plate mounting).
12	SeaTalk NG blanking plug.
13	SeaTalk NG 400 mm (15.7 in.) spur cable.

5.2 Parts supplied – Ray63 / Ray73

The parts listed below are supplied with the Ray63 and Ray73.

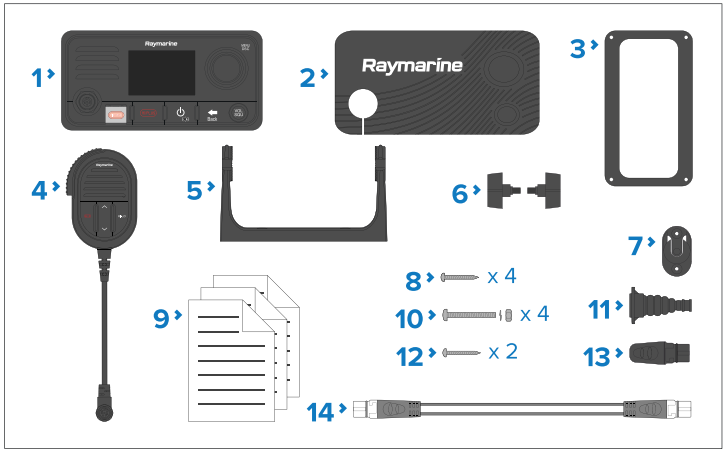

	Description
1	VHF Radio.
2	Sun cover.
3	Panel mount gasket.
4	Fistmic.
5	Mounting bracket (Trunnion).
6	Mounting bracket knobs.
7	Fistmic hook plate.
8	4 x M4x25 screws (For Bracket (Trunnion) mounting).
9	Documentation.
10	4 x M4 nuts, spring washers and M4x25 machine screws (For Panel mounting).
11	Protective antenna boot.
12	2 x M4x12 screws (For Fistmic hook plate mounting).

	Description
13	SeaTalk NG blanking plug.
14	SeaTalk NG 400 mm (15.7 in.) spur cable.

CHAPTER 6: PRODUCT DIMENSIONS

CHAPTER CONTENTS

- 6.1 Product dimensions — Ray53 — page 36
- 6.2 Product dimensions — Ray63 / Ray73 — page 36
- 6.3 Product dimensions — Fistmic — page 37
- 6.4 Product dimensions — Wired handset (Raymic) — page 38
- 6.5 Product dimensions — speakers — page 38
- 6.6 Product dimensions — Wireless hub — page 39
- 6.7 Product dimensions — Wireless handset and holster — page 39

6.1 Product dimensions — Ray53

Panel mount dimensions

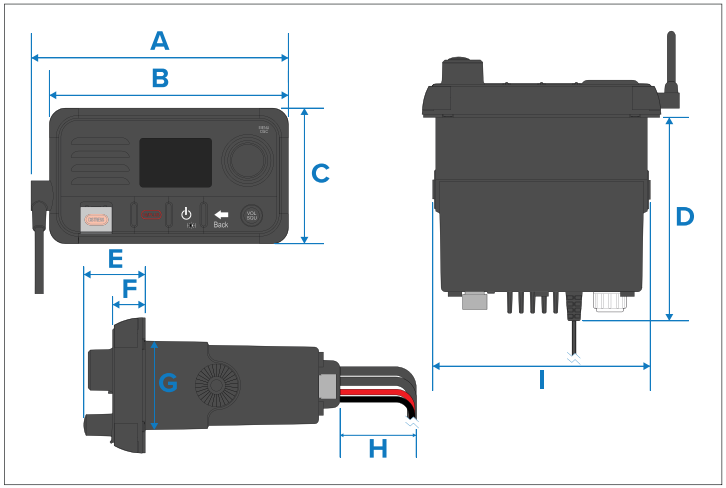

	Dimension
A	168.00 mm (6.61 in)
B	156.00 mm (6.14 in)
C	88.50 mm (3.48 in)
D	134.00 mm (5.28 in)
E	39.75 mm (1.56 in)
F	21.50 mm (0.85 in)
G	59.00 mm (2.32 in)
H	25.00 mm (0.98 in)
I	143.60 mm (5.65 in)

Bracket mount dimensions

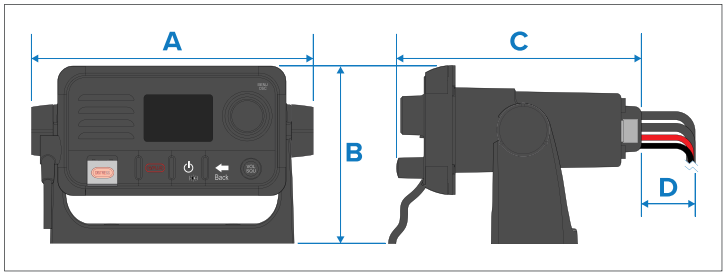

	Dimension
A	192.50 mm (7.58 in)
B	121.00 mm (4.76 in)
C	173.75 mm (6.84 in)
D	25.00 mm (0.98 in)

6.2 Product dimensions — Ray63 / Ray73

Panel mount dimensions

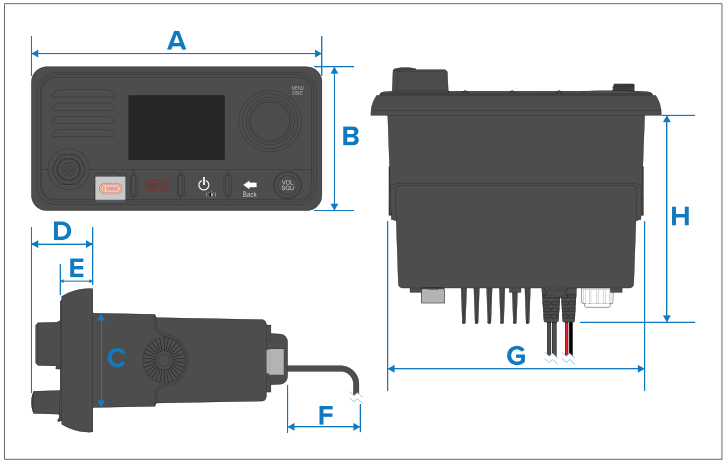

	Dimension
A	199.00 mm (7.83 in)
B	98.50 mm (3.88 in)
C	65.00 mm (2.56 in)
D	61.60 mm (2.43 in)
E	16.60 mm (0.65 in)
F	90.00 mm (3.54 in)
G	176.00 mm (6.93 in)
H	143.00 mm (5.63 in)

Bracket mount dimensions

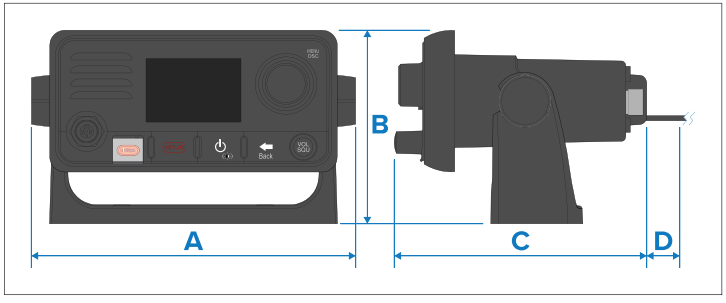

	Dimension
A	226.00 mm (8.90 in)
B	133.00 mm (5.24 in)
C	204.60 mm (8.06 in)
D	90.00 mm (3.54 in)

Note:
A maximum cable bend radius of 90 mm (3.54 in) is required to allow for the handset cable connector.

6.3 Product dimensions — Fistmic

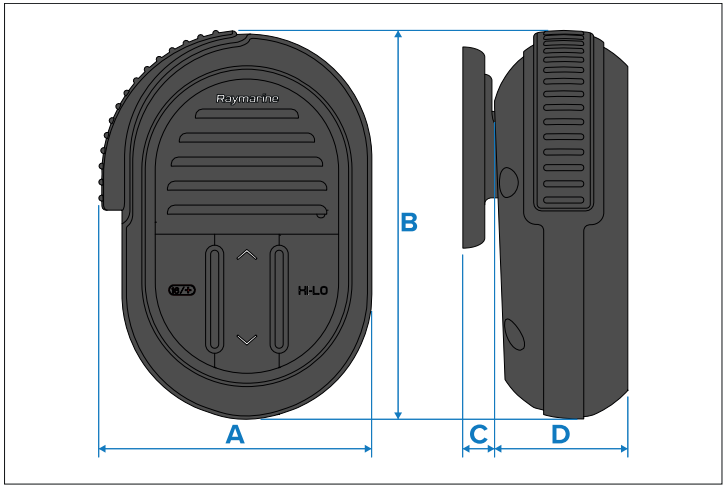

	Dimension
A	68.50 mm (2.70 in)
B	97.60 mm (3.84 in)
C	8.00 mm (0.31 in)
D	36.00 mm (1.42 in)

Note:
The Fistmic's fitted, coiled lead can be extended to approximately 1 meter (3.3 ft.).

6.4 Product dimensions — Wired handset (Raymic)

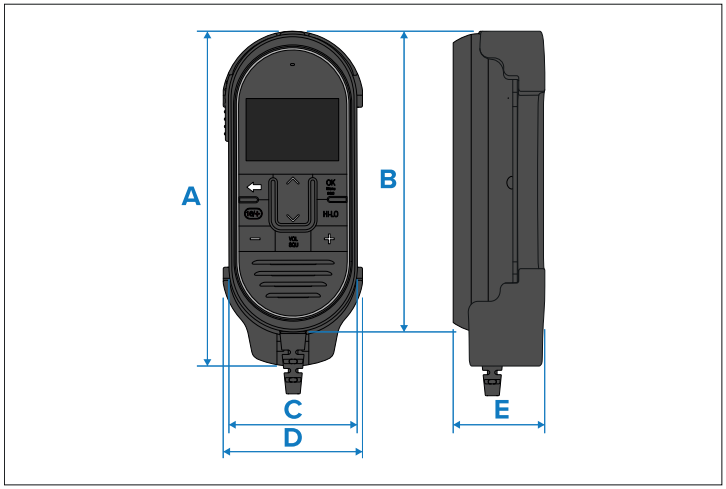

	Dimension
A	167.34 mm (6.59 in)
B	151.00 mm (5.94 in)
C	66.90 mm (2.63 in)
D	70.00 mm (2.76 in)
E	46.70 mm (1.84 in)

Note:
The Handset's fitted, coiled lead can be extended to approximately 1 meter (3.3 ft.). Ensure sufficient space is available below the desired mounting area to accommodate the cable.

6.5 Product dimensions — speakers

The dimensions for the Passive and Active speakers are shown below.

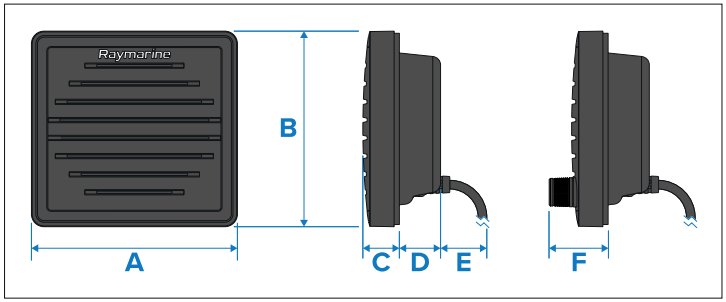

	Dimension
A	118.50 mm (4.67 in)
B	112.5 mm (4.43 in)
C	18.30 mm (0.72 in)
D	26.40 mm (1.04 in)
E	25.00 mm (0.98 in)
F	30.60 mm (1.20 in)

Note:

- The Passive speaker includes a fitted 2 m (6.56 ft) audio cable terminated with a male RCA plug.
- The Active speaker includes a fitted 2 m (6.56 ft) power cable terminated with spade connectors.

6.6 Product dimensions — Wireless hub

The dimensions for the wireless hub are shown below.

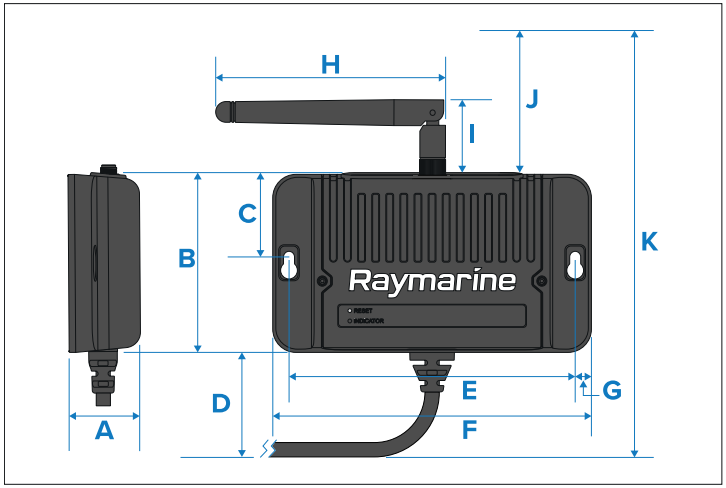

	Dimension
A	26.70 mm (1.05 in)
B	68.04 mm (2.68 in)
C	32.16 mm (1.27 in)
D	70.00 mm (2.76 in)
E	109.20 mm (4.30 in)
F	121.60 mm (4.79 in)
G	6.20 mm (0.24 in)
H	87.72 mm (3.45 in)
I	29.14 mm (1.15 in) Min
J	106.95 mm (4.21 in) Max
K	244.99 mm (9.65 in)

Note:

- The Wireless hub includes a fitted 5 m (16.4 ft) cable for connection to your VHF Radio.
- If the installation requires the cable to be passed through a bulkhead or panelling, a 20 mm (0.79 in) diameter hole is required to allow the connector to pass through.

6.7 Product dimensions — Wireless handset and holster

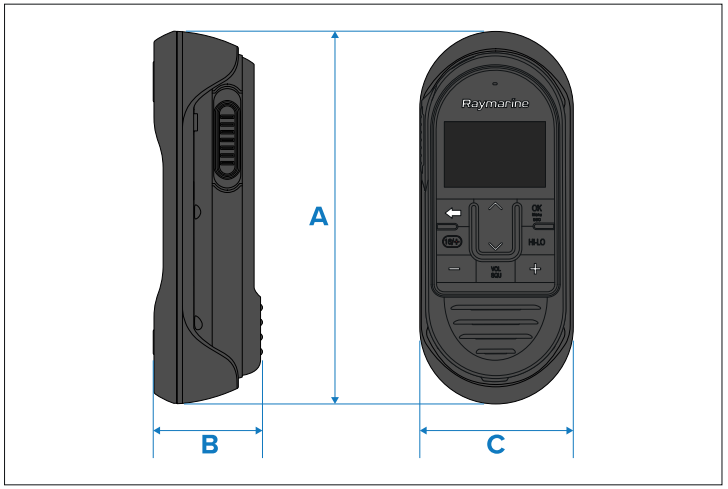

	Dimension
A	173.33 mm (6.82 in)
B	50.50 mm (1.99 in)
C	71.41 mm (2.81 in)

Note:
The charging holster is supplied with a fitted 2 m (6.56 ft) power cable terminated with bare ended wires.

CHAPTER 7: LOCATION REQUIREMENTS

CHAPTER CONTENTS

- 7.1 Warnings and cautions — page 41
- 7.2 General location requirements — page 41
- 7.3 GNSS (GPS) location requirements — page 43
- 7.4 External GNSS (GPS) antenna location requirements — page 44
- 7.5 Antenna mounting and EME exposure — page 44
- 7.6 Multiple antenna installations — page 44
- 7.7 Loud hailer location requirements — page 44
- 7.8 Wireless product location requirements — page 44

7.1 Warnings and cautions

Important:
Before proceeding, ensure that you have read and understood the warnings and cautions provided in the following section of this document:

• **p.12 — Important information**

Warning: Maximum Permissible Exposure (MPE)

For optimal radio performance and minimal human exposure to Radio Frequency (RF) electromagnetic energy, you must ensure that the **antenna** is:

• connected to the radio before transmitting

• located where it will be away from people

• located at least 2.21 meters (7.25 ft) from the radio's main unit.

Failure to observe these guidelines may expose those within the Maximum Permissible Exposure (MPE) radius to RF radiation absorption that exceeds the FCC MPE limit.

It is the radio operator's responsibility to ensure that no person comes within this MPE radius.

Warning: Potential ignition source

This product is NOT approved for use in hazardous/flammable atmospheres. Do NOT install in a hazardous/flammable atmosphere (such as in an engine room or near fuel tanks).

7.2 General location requirements

When selecting a location for the unit it is important to consider a number of factors.

To ensure optimum performance, it is recommended that the display is temporarily powered up and tested, at the chosen location, prior to installation.

Ventilation requirements

To provide adequate airflow:

- Ensure that equipment is mounted in a compartment of suitable size.
- Ensure that ventilation holes are not obstructed.
- Ensure adequate separation of equipment.

Water ingress

Base station — Although the Base station is waterproof to IPx6 and IPx7, it is recommended that the Base station is mounted below decks, in an area protected from prolonged and direct exposure to rain and salt spray.
Wired handset — The Handset has been designed to be mounted above or below decks and is rated to IPx6 and IPx7.
Wired (Passive) speaker — The speakers has been designed to be mounted above or below decks and are rated to IPx6 and IPx7.

Mounting surface requirements

When selecting a mounting surface, ensure that:

- The product will be adequately supported on a secure, flat surface. Do NOT mount units or cut holes in places which may damage the structure of the vessel.
- Sufficient space is available around the product.
- There is nothing behind the mounting surface that may be damaged when drilling.

Cable routing requirements

Ensure you have identified the route that all required cables will take and that sufficient space is available to allow connection of cables:

- Unless otherwise stated, a minimum cable bend radius of 100 mm (3.94 in) is required.
- Where necessary, cable supports should be used to prevent stress on connectors.

Electrical interference

Select a location that is far enough away from equipment that may cause interference, such as motors, generators and radio transmitters/receivers.

Power supply

Select a location that is as close as possible to the vessel's DC power supply. This will help to keep cable runs to a minimum.

RF interference

Certain third-party external electrical equipment can cause Radio Frequency (RF) interference with GNSS (GPS), AIS or VHF devices, if the external equipment is not adequately insulated and emits excessive levels of electromagnetic interference (EMI).

Some common examples of such external equipment include LED lighting (e.g.: navigation lights, searchlights and floodlights, interior and exterior lights) and terrestrial TV tuners.

To minimize interference from such equipment:

- Keep it as far away from GNSS (GPS), AIS or VHF products and their antennas as possible.
- Ensure that any power cables for external equipment are not entangled with the power or data cables for these devices.
- Consider fitting one or more high frequency suppression ferrites to the EMI-emitting device. The ferrite(s) should be rated to be effective in the range 100 MHz to 2.5 GHz, and should be fitted to the power cable and any other cables exiting the EMI-emitting device, as close as possible to the position where the cable exits the device.

Compass safe distance

To prevent potential interference with the vessel's magnetic compasses, ensure an adequate distance is maintained from the product.

When choosing a suitable location for the product, you must aim to maintain a distance of **at least** 1 m (3.3 ft.) in all directions from any compasses.

For some smaller vessels it may not be possible to locate the product this far away from a compass. In this situation, when choosing the installation location for your product, ensure that the compass is not affected by the product when it is in a powered on state.

EMC installation guidelines

Raymarine® equipment and accessories conform to the appropriate Electromagnetic Compatibility (EMC) regulations, to minimize electromagnetic interference between equipment and minimize the effect such interference could have on the performance of your system

Correct installation is required to ensure that EMC performance is not compromised.

Note:
In areas of extreme EMC interference, some slight interference may be noticed. Where this occurs the product and the source of the interference should be separated by a greater distance.

For **optimum** EMC performance we recommend that wherever possible:

- Raymarine® equipment and cables connected to it are:
  - At least 1 m (3 ft) from any equipment transmitting or cables carrying radio signals e.g. VHF radios, cables and antennas. In the case of SSB radios, the distance should be increased to 2 m (7 ft).
  - More than 2 m (7 ft) from the path of a Radar beam. A Radar beam can normally be assumed to spread 20 degrees above and below the radiating element.
- The product is supplied power from a separate battery from that used for engine start. This is important to prevent erratic behavior and data loss which can occur if the engine start does not have a separate battery.
- Only Raymarine® specified cables are used.
- Cables are not cut or extended, unless doing so is detailed in the installation instructions.

Note:
Where constraints on the installation prevent any of the above recommendations, always ensure the maximum possible separation between different items of electrical equipment, to provide the best conditions for EMC performance throughout the installation.

Suppression ferrites

- Raymarine cables may be pre-fitted or supplied with suppression ferrites. These are important for correct EMC performance. If ferrites are supplied separately to the cables (i.e. not pre-fitted), you must fit the supplied ferrites, using the supplied instructions.
- If a ferrite has to be removed for any purpose (e.g. installation or maintenance), it must be replaced in the original position before the product is used.
- Use only ferrites of the correct type, supplied by Raymarine or its authorized dealers.
- Where an installation requires multiple ferrites to be added to a cable, additional cable clips should be used to prevent stress on the connectors due to the extra weight of the cable.

Connections to other equipment

Requirement for ferrites on non-Raymarine cables.

If your product is to be connected to other equipment using a cable not supplied by Raymarine®, a suppression ferrite MUST always be attached to the end of the cable nearest to the Raymarine® product.

7.3 GNSS (GPS) location requirements

In addition to general guidelines concerning the location of marine electronics, there are a number of environmental factors to consider when installing equipment with an internal GNSS (GPS) receiver.

Mounting location

- **Above Decks** (e.g. open air) mounting: Provides optimal performance. (For equipment with appropriate waterproof rating.)
- **Below Decks** (e.g. enclosed space) mounting: Performance may be less effective and may require an external antenna or receiver mounted above decks.

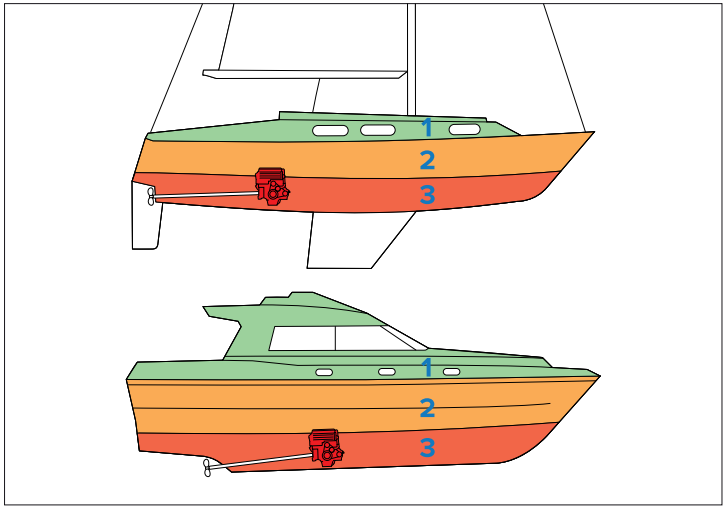

	Color	Location
1		This location provides optimal performance (above decks).
2		In this location, performance may be less effective.
3		This location is NOT recommended.

Vessel construction

The construction of your vessel can have an impact on performance. For example, the proximity of heavy structures such as a structural bulkhead, or the interior of larger vessels may result in a reduced signal. The construction materials can also have an impact. In particular, steel, aluminium or carbon surfaces can impact performance. Before locating equipment with an internal antenna below decks, or on a steel, aluminium or carbon construction vessel or surface, seek professional assistance.

Prevailing conditions

The weather and location of the vessel can affect performance. Typically calm clear conditions provide a more accurate position fix. Vessels at extreme northerly or southerly latitudes may also

receive a weaker signal. An antenna mounted below decks will be more susceptible to performance issues related to the prevailing conditions.

7.4 External GNSS (GPS) antenna location requirements

Your product includes a built-in GNSS (GPS) receiver and antenna. It is also possible to connect and use an external GNSS (GPS) antenna (such as the GA150) instead, which will provide improved performance.

When using an external antenna, ensure that you follow the location requirements specified in your external antenna's installation instructions.

Note:
Before using an external antenna, you must first change the *[GPS antenna]* system setting. For more information, refer to:
p.93 — Switching between internal and external antenna

7.5 Antenna mounting and EME exposure

Ensure that your VHF antenna is connected to the radio before transmission.

Raymarine® declares a Maximum Permissible Exposure (MPE) radius of 1.8 meters (5.9 ft.) for this system, assuming 25 watts output to an omnidirectional antenna of 3dBi gain or less.

For watercraft with suitable structures, the antenna base must be at least 3.8 meters (12.5 ft) above the main deck to meet the MPE for persons up to 2 metres (6.6 ft) tall. For watercraft without such structures, the antenna must be mounted so that its base is a minimum of 1.8 meters (5.9 ft.) vertically from heads of all persons.

The antenna must be isolated from the vessel's metalwork using an insulated (e.g. plastic) mounting bracket.

7.6 Multiple antenna installations

Important additional considerations when installing multiple antennas.

To prevent potential channel interference when installing two or more VHF radios on the same vessel, ensure that the antennas are located at least 2.4 m (8 ft.) away from each other.

7.7 Loud hailer location requirements

To avoid audio feedback, ensure that the loud hailer is at least 3 m (9.8 ft) away from the VHF base unit and any handset or fistmic at all times. When talking, ensure that the handset or fistmic is pointing in the opposite direction to the loud hailer.

7.8 Wireless product location requirements

The optional wireless hub, handset and active speakers require further considerations when selecting a mounting location

Wireless location requirements for optimum performance

All wireless devices in your system must be located in such a way that they can reliably receive and/or transmit wireless signals.

A number of factors can influence wireless performance. For example, physical obstacles and certain vessel structures and materials can all negatively impact wireless performance. Therefore, **it's important to check a product's wireless performance at the desired installation location before drilling any mounting holes**.

Vessel construction and materials

Wherever possible, mount products on surfaces constructed from GRP (e.g. fiberglass resin, or foam), or on dry wooden bulkheads. **Conductive materials in the signal path can have a significant impact on wireless signal performance**. Reflective surfaces such as metal surfaces, some types of glass and even mirrors can drastically affect performance or even block the wireless signal. Installation locations that are in close proximity to these materials should be avoided. **Do NOT mount wireless products directly to conductive materials.** This includes any mounting surface or enclosure/pod. Examples of conductive materials include, but are not limited to:

- carbon fibre, kevlar, or aramid (including sails made from these materials)
- aluminium
- steel

In installations with conductive materials, if available, mount the wireless product using an accessory pole mount or deck mounting kit. A clearance of at least 10 cm (3.9 in) is required to minimize the ground effect from conductive materials. This applies to transmitters as well as displays. If moving the product fixes the problem, consider cutting an antenna clearance hole behind the unit (once the product position and mounting have been finalized).
Wireless performance can also be degraded in locations where the wireless signal passes through a bulkhead containing power cables. Crew members (especially when wet) can also be obstructive to wireless signals, if their bodies pass through the signal area between wireless sensor and any associated displays.

Checking and optimizing signal strength

It may be necessary to experiment with the location of your wireless products to achieve optimal wireless performance and a clear signal path.
The distance between wireless products should always be kept to a minimum. Do not exceed the maximum stated range of your wireless product (maximum range will vary for each device).
Wireless performance degrades over distance, so products farther away will receive less network bandwidth. Products installed close to their maximum wireless range may experience slow connection speeds, signal dropouts, or not being able to connect at all.
For best results, the wireless product should have a clear, direct line-of-sight to the product it will be connected to. Any physical obstructions can degrade or even block the wireless signal.
Some wireless products feature a signal strength indicator to assist in the process of determining the location with the best wireless performance. Choose the location with the highest and most consistently strong direct signal reading, during a 5 minute monitoring period. Try alternative locations for the transmitter to maximize the signal strength to the displays; e.g. try locations below a hatch or skylight or near to a window. A small change in product position can result in a significant change in the signal strength.

Note:
Some wireless products (e.g. a Hull Transmitter) will not transmit data unless a transducer is connected. Also consider that an NMEA or SeaTalk NG product (e.g. an interface) will not transmit data unless an appropriate data source is connected.

Interference and other equipment

Interference from other people's wireless devices can cause interference with your products. You can use a third-party wireless analyzer tool / smartphone app to assess the best wireless channel to use (e.g. a channel not in use or one used by the least number of devices).
Wireless products should be installed at least 1 m (3 ft) away from:

- Other wireless-enabled products
- Transmitting products that send wireless signals in the same frequency range
- Other electrical, electronic or electromagnetic equipment that may generate interference.

Software updates

It's also important to ensure all your wireless products are running the latest software versions, as improvements are made over time to wireless performance.

Pre-installation site survey

Before installing a wireless device, a site survey should be performed to ensure the wireless signal strength at the desired installation location is sufficient to maintain a reliable connection.

You can perform a site survey using your smartphone or tablet and a wireless signal analyzer app, such as "Wi-Fi Analyzer" by Farproc or similar.

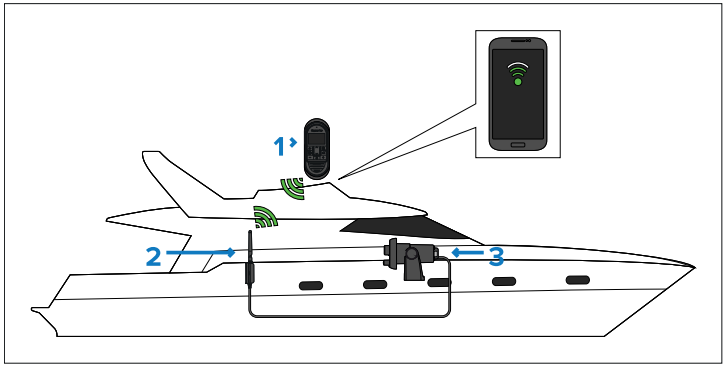

	Description
1	Wireless handset
2	Wireless hub
3	VHF Radio

1. Install the wireless analyzer app on your smart device.
2. Connect the wireless hub to your VHF Radio.
3. Move the hub to its desired location.

   The hub should be located as close to the desired location of the wireless handset as possible. An additional wireless hub antenna extension cable may also be required; this is available to order as accessory A80541, and provides an additional 5 meters of cable length.
4. Power on your VHF Radio.
5. Make a note of your wireless hub's name (SSID).

   The wireless hub's name can be found using a wired handset: [Menu > Set-up > Wireless set-up > Wireless hub set-up > Hub name]. (By default the hub name will be RM followed by the full part number and serial number of the VHF Radio it is connected to, e.g.: RM E70517 107828).
6. Go to the location you have chosen for your wireless handset.
7. Open the wireless analyzer app on your smart device and scan available networks.
8. Establish the signal strength of your hub's wireless network at the chosen location.

   For reliable wireless performance the signal strength should be better than –75dBm, the closer the signal is to zero the better the wireless performance will be (e.g. –40dBm is better than –75dBm).
9. If the wireless channel your hub is using is congested with wireless signals then change your hub's wireless channel (*[Menu > Set-up > Wireless set-up > Wireless hub set-up > Wi-Fi channel]*), and select a different wireless channel.

   Try channels 1, 6 and 11 first as these are usually the preferred wireless channels. Otherwise try the channel that has the least congestion.
10. If you have a very weak or intermittent signal then you will need to investigate further, please refer to the wireless location requirements to help establish what may be causing the problem.
11. Repeat steps 6 to 10 with each wireless handset you wish to install.

CHAPTER 8: CABLES AND CONNECTIONS — GENERAL INFORMATION

CHAPTER CONTENTS

- 8.1 General cabling guidance — page 48
- 8.2 Connections overview — Ray53 — page 49
- 8.3 Connections overview — Ray63 / Ray73 — page 50

8.1 General cabling guidance

Cable types and length

It is important to use cables of the appropriate type and length.

- Unless otherwise stated only use cables supplied by Raymarine.
- Where it is necessary to use non-Raymarine cables, ensure that they are of correct quality and gauge for their intended purpose. (e.g.: longer power cable runs may require larger wire gauges to minimize voltage drop along the run).

Cable routing and bend radius

To maximize cable performance and lifespan, it's important to ensure that all cables are routed correctly and adequate space is provided to allow for each cable's minimum bend radius.

Minimum cable bend radius

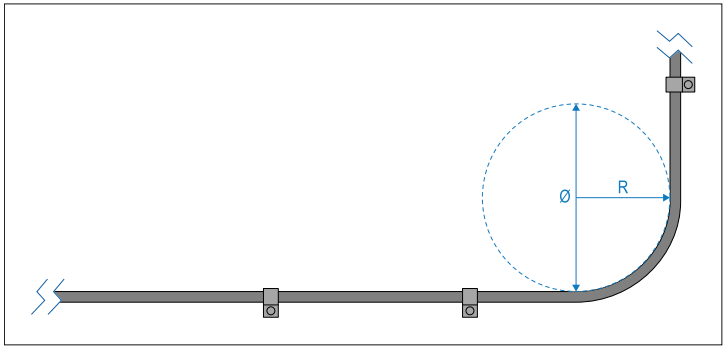

Do NOT bend cables excessively. Wherever possible, ensure that your chosen product installation location allows enough clearance for the minimum cable bend diameter specified in the following table:

	Description	Value
Ø	Cable minimum bend **diameter**.	200 mm (7.87 in.)
R	Cable minimum bend **radius**.	100 mm (3.94 in.)

Note:
For products where multiple different cable types are connected, each with a different minimum cable bend radius, the higher figure is provided in the table above (i.e. the cable with the greatest minimum bend radius is specified).

Cable routing — best practices

- Protect all cables from physical damage and exposure to heat. Use trunking or conduit where possible. Do NOT run cables through bilges or doorways, or close to moving or hot objects.
- Secure cables in place using cable clips or cable ties. Coil any excess cable and tie it out of the way.
- Where a cable passes through an exposed bulkhead or deckhead, use a suitable watertight feed-through (conduit).
- Do NOT run cables near to engines or fluorescent lights.
- Always route data cables as far away as possible from:
  - Other equipment and cables.
  - High current-carrying AC and DC power lines.
  - Antennas.

Strain relief

Use adequate strain relief for cabling to ensure that connectors are protected from strain and will not pull out under extreme sea conditions.

Circuit isolation

Appropriate circuit isolation is required for installations using both AC and DC current:

- Always use isolating transformers or a separate power-inverter to run PCs, processors, displays and other sensitive electronic instruments or devices.
- If using Weather FAX audio cables, always use an isolating transformer.
- If using a third-party audio amplifier, always use an isolated power supply.
- If using an RS232/NMEA converter, always ensure optical isolation on the signal lines.

- Always ensure that PCs or other sensitive electronic devices have a dedicated power circuit.

Cable shielding

Ensure that cable shielding is not damaged during installation and that all cables are properly shielded.

Important:
Be aware that some **third-party** cables and adapters (for example, certain Ethernet cables using RJ45 connectors) are not always shielded. To prevent breaks in cable shielding continuity and potential grounding issues, special attention is required to ensure that any cables, extension cables, adapters, or other signal-coupling devices used in cable runs **maintain all shield connections throughout the cable run**.

Connections to other equipment

Requirement for ferrites on non-Raymarine cables:

If your Raymarine equipment is to be connected to other equipment using a cable not supplied by Raymarine, a suppression ferrite MUST always be attached to the cable near the Raymarine unit.

For more information, refer to your third-party cable manufacturer.

Dust caps

To prevent potential water ingress, connectors not in use should be protected using the supplied dust caps.

Bare-ended wire connections

You must ensure that any bare-ended wires are adequately protected from short circuit and water ingress.

Bare-ended wire connections

It is recommended that bare-ended wire connections are made by soldering or using crimp connectors, and then protected by wrapping the connection in electrical insulation tape.

Unused bare-ended wires

Any unused bare-ended wires should be folded back and wrapped in electrical insulation tape.

8.2 Connections overview — Ray53

The following connections are available on the Ray53.

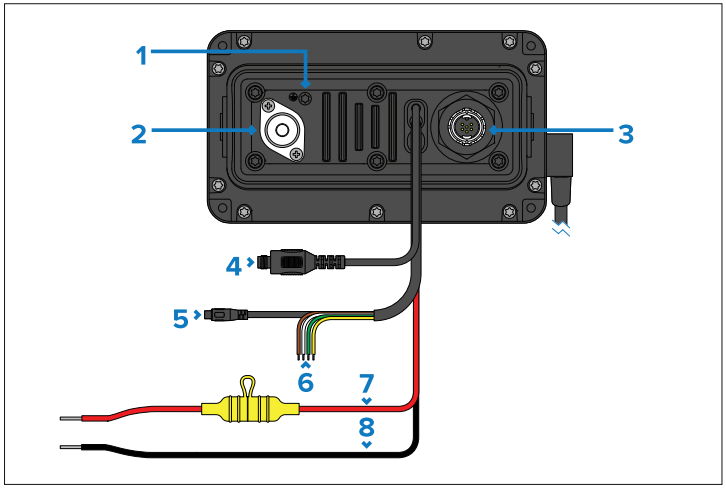

1. Grounding point — **DO NOT USE!**
2. SO239 VHF antenna connection.
3. SeaTalk NG connection.
4. TNC external GNSS (GPS) antenna connection.
5. RCA Audio connection.
6. NMEA 0183 connection.
7. Red wire (positive) — connects to the power supply's positive terminal.
8. Black wire (negative) — connects to the power supply's negative terminal.

8.3 Connections overview — Ray63 / Ray73

The following connections are available on the Ray63 and Ray73.

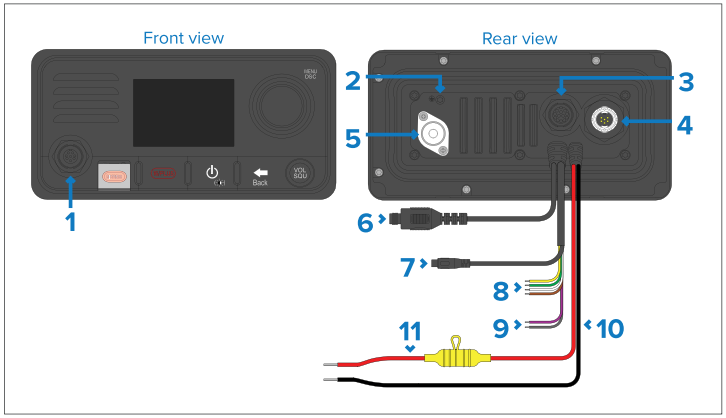

1. Primary station (8-pin) connection.
2. Grounding point — **DO NOT USE!**
3. Second station (12-pin) connection.
4. SeaTalk NG connection.
5. S0239 VHF antenna connection.
6. TNC GNSS (GPS) connection.
7. RCA Audio connection.
8. NMEA 0183.
9. Loud hailer connection (Ray73 only).
10. Black wire (negative) — connects to the power supply's negative terminal.
11. Red wire (positive) — connects to the power supply's positive terminal.

Primary and secondary station connectors

The connectors below are used to connect the supplied Fistmic and / or the optional Wired (Raymic) handset to the Base station.

Connector	Description	Connects to
	Primary station connector (8-pin front Fistmic connector).	• Fistmic (supplied).
	Secondary station connector (12-pin rear handset connector).	• Wireless hub via adaptor (R70739). • Wired handset. • Wired handset via Handset extension cables (A80291, A80292, A80290). • Fistmic via Fistmic adaptor cable (A80296). • Wired handset via Handset adaptor cable (A80297).

CHAPTER 9: MOUNTING

CHAPTER CONTENTS

- 9.1 Tools required — page 52
- 9.2 Mounting options — page 52
- 9.3 Bracket mounting — page 52
- 9.4 Panel mounting — Ray53 — page 53
- 9.5 Panel mounting — Ray63 / Ray73 — page 55
- 9.6 Fistmic mounting — page 56
- 9.7 Wired handset mounting using the holster — page 57
- 9.8 Wired and wireless speaker mounting — page 57
- 9.9 Pass-through panel kit mounting — page 58
- 9.10 Mounting the wireless hub — page 59
- 9.11 Mounting the charging holster for the wireless handset — page 61

9.1 Tools required

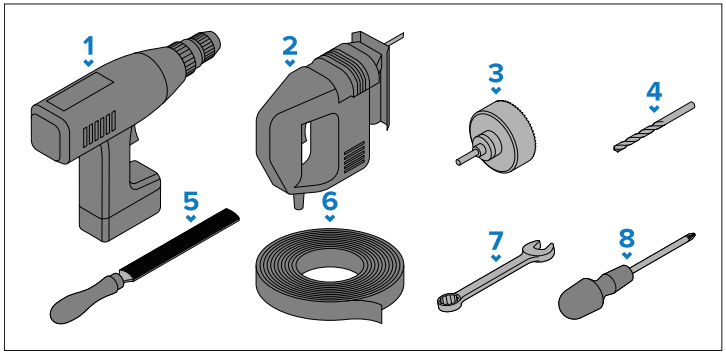

1. Power drill.
2. Jigsaw for panel mount cut-out.
3. Hole saw for panel mounting (For hole saw size refer to your product's mounting template).
4. Drill bit for surface mounting or bracket mounting.
5. File for panel mount cut out.
6. Adhesive tape.
7. 7 mm (9/32") Wrench (spanner) for bracket mounting fixings.
8. Pozi-drive screwdriver.

9.2 Mounting options

The product can be mounted in the following configurations.

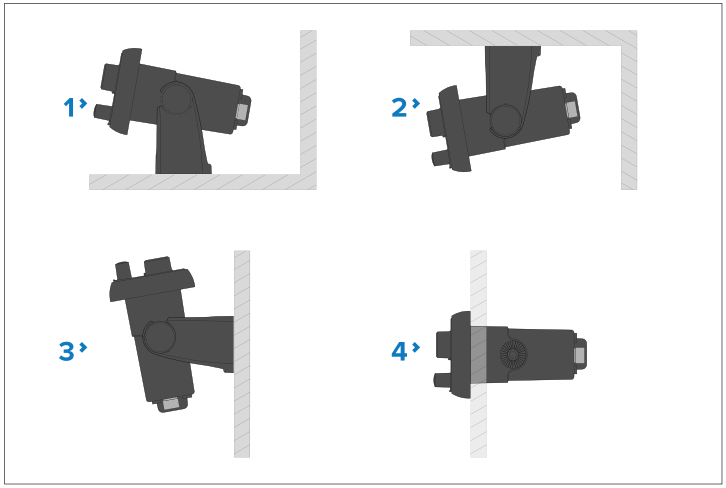

1. Bracket mount — Table top
2. Bracket mount — Overhead
3. Bracket mount — Bulkhead
4. Panel mount

9.3 Bracket mounting

Follow the steps below to mount the product on it's bracket.

Before mounting the unit ensure that you have:

- Selected a suitable location, ensuring there is nothing behind the mounting surface that may be damaged when drilling.
- Identified the cable connections and route that the cables will take.
- Attached the front bezel.

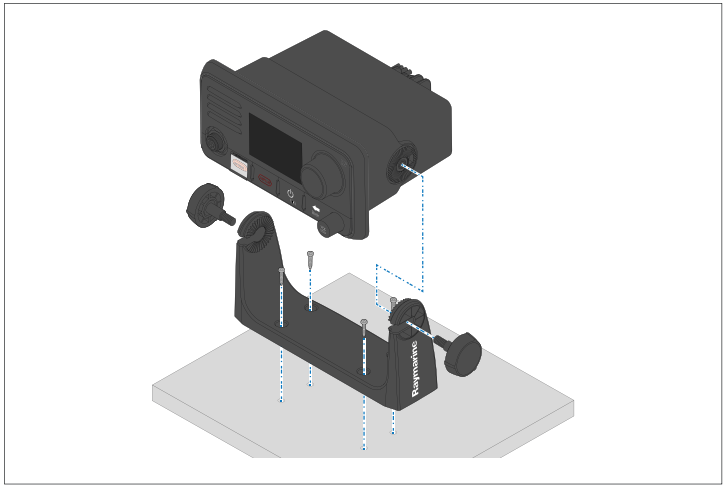

1. Mark the location of the bracket mounting holes on the mounting surface.
2. Drill holes for the mounting fixings using a drill with a suitable sized drill bit.
3. Use the fixings provided to attach the bracket securely to the mounting surface.
4. Attach the unit to the bracket and secure in place using the bracket mounting knobs.

Note:
Drill bit, tap size and tightening torque is dependent on the thickness and type of material the unit is to be mounted on.

9.4 Panel mounting — Ray53

Removing the mounting hole covers

Before the radio can be panel mounted the mounting hole covers must be removed.

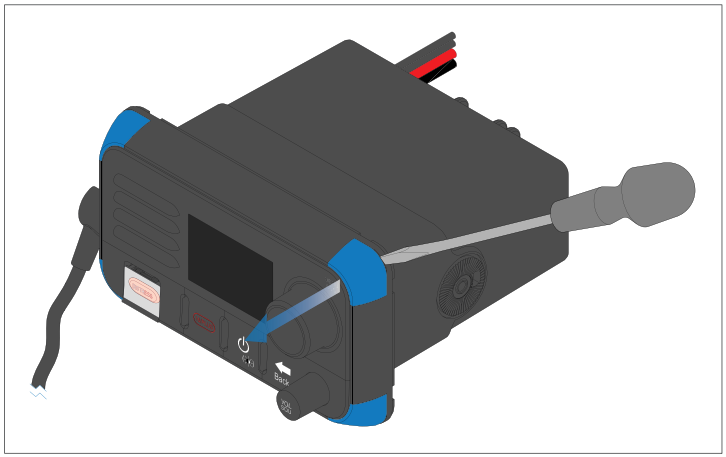

1. Using a flat blade screw driver, insert the tip of the screw driver in the slot between the back of the cover and the unit.
2. Carefully lever the cover forward away from the unit.
3. Repeat steps 1 and 2 for the remaining mounting hole covers.

Drilling out the mounting holes

When panel mounting the radio the mounting holes must be drilled out.

Guides for the mounting holes can be found on the corners of the unit, under the mounting hole covers.

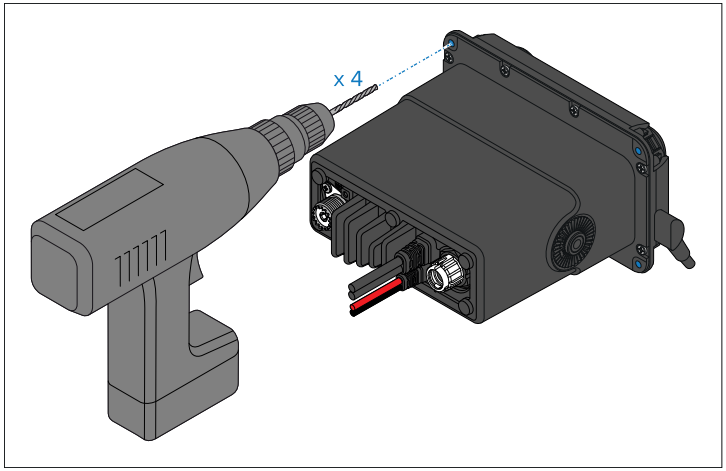

1. Using a drill and a 4 mm (5/32) drill bit, drill out the 4 mounting holes.

   Holes should be drilled from the front of the unit, taking care not to apply too much force to the drill.

Panel mounting

To panel mount the radio follow the steps below.

Before mounting the product, ensure that you have:

- Selected a suitable location, ensuring there is nothing behind the mounting surface that may be damaged when drilling / cutting.
- Identified the cable connections and route that the cables will take.
- Removed the mounting hole covers.
- Drilled out the mounting holes on the unit.

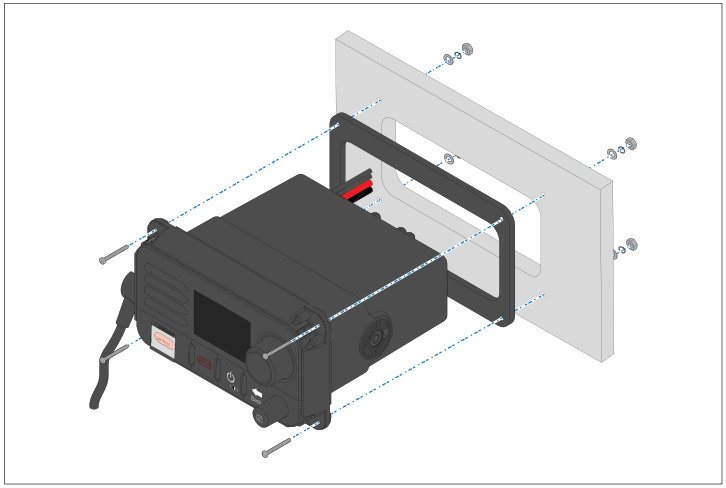

1. Check the selected location for the unit. A clear, flat area with suitable clearance behind the panel is required.
2. Fix the supplied mounting template to the selected location, using masking or self-adhesive tape.
3. Using a suitable hole saw (the size is indicated on the template), make a hole in each corner of the cut-out area.
4. Using a suitable saw, cut along the inside edge of the cut-out line.
5. Ensure that the unit fits into the removed area and then file around the rough edge until smooth.
6. Drill 4 holes as indicated on the template to accept the fixings.
7. Remove the backings from the supplied gasket.
8. Place the gasket in position on the back of the unit and press firmly onto the flange.
9. Connect the power, and other cables to the unit.
10. Slide the unit into place and secure using the fixings provided.

11. Attach the mounting hole covers.

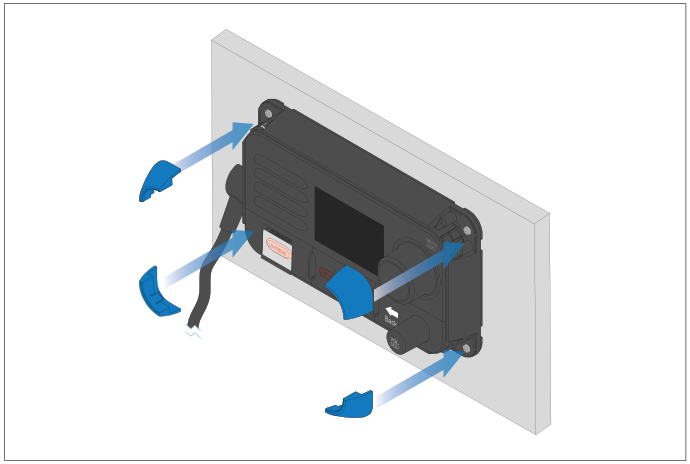

Note:
The supplied gasket provides a seal between the unit and a suitably flat and stiff mounting surface or binnacle. The gasket should always be used. It may also be necessary to use a marine-grade sealant if the mounting surface or binnacle is not entirely flat and stiff or has a rough surface finish.

9.5 Panel mounting — Ray63 / Ray73

Drilling out the mounting holes

Before panel mounting the Radio the mounting holes must be drilled out.

Guides for the mounting holes can be found in the corners of the unit, under the front bezel.

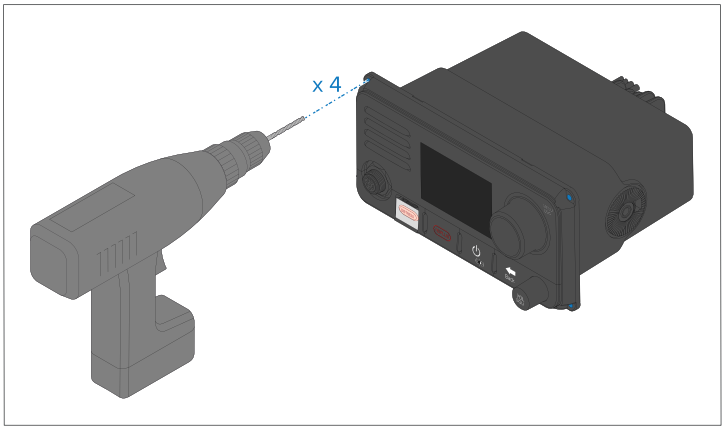

1. Using a drill and a 4 mm (5/32) drill bit, drill out the 4 mounting holes.

   Holes should be drilled from the front of the unit, taking care not to damage the unit by applying too much force to the drill.

Panel mounting

To panel mount the Radio follow the steps below.

Before mounting the product, ensure that you have:

- Selected a suitable location, ensuring there is nothing behind the mounting surface that may be damaged when drilling / cutting.
- Identified the cable connections and route that the cables will take.
- Drilled out the mounting holes on the unit.
- Removed the front bezel.

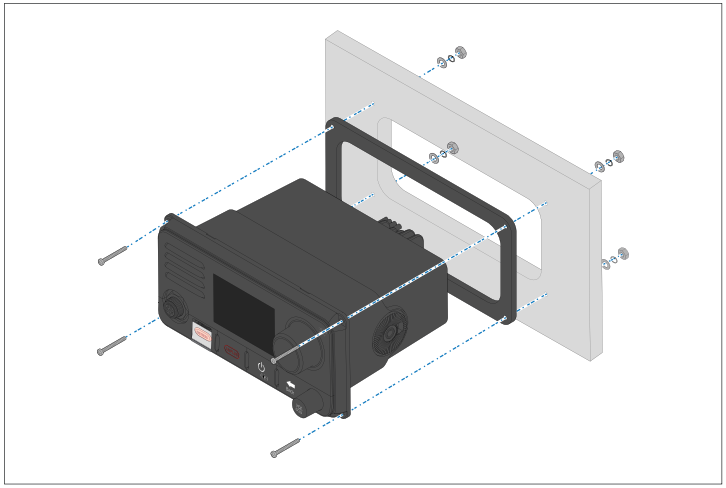

1. Check the selected location for the unit. A clear, flat area with suitable clearance behind the panel is required.
2. Fix the supplied mounting template to the selected location, using masking or self-adhesive tape.
3. Using a suitable hole saw (the size is indicated on the template), make a hole in each corner of the cut-out area.
4. Using a suitable saw, cut along the inside edge of the cut-out line.
5. Ensure that the unit fits into the removed area and then file around the rough edge until smooth.
6. Drill 4 holes as indicated on the template to accept the fixings.
7. Remove the backings from the supplied gasket.
8. Place the gasket in position on the back of the unit and press firmly onto the flange.
9. Connect the power, and other cables to the unit.
10. Slide the unit into place and secure using the fixings provided.
11. Attach the front bezel.

Note:
The supplied gasket provides a seal between the unit and a suitably flat and stiff mounting surface or binnacle. The gasket should always be used. It may also be necessary to use a marine-grade sealant if the mounting surface or binnacle is not entirely flat and stiff or has a rough surface finish.

Attaching the front bezel

After installation of the Radio the front bezel can be attached following the steps below.

The following procedure assumes that the unit has already been mounted in position.

1. Orientate the bottom-right side of the bezel under the bottom-right side of the unit, ensuring that the clips along the bottom edge of the bezel latch into position.

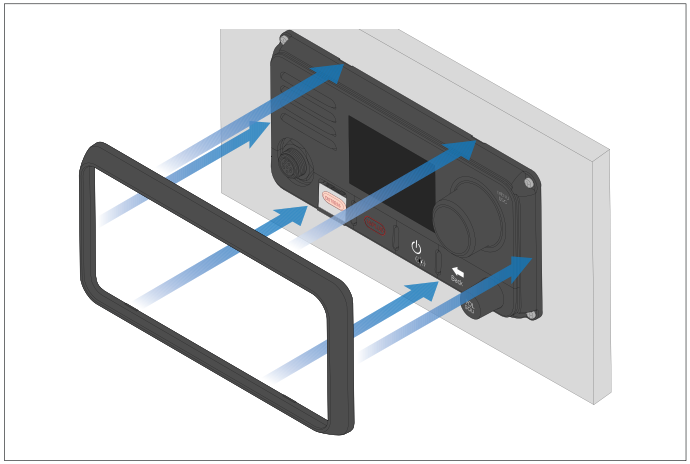

2. Ensure the bezel is correctly aligned with the unit, as shown.
3. Apply firm but even pressure to the bezel along the:
   i. Outer edges - work from the sides upwards and then along the top edge, to ensure that it clips securely into position.
   ii. Inner edges - ensure that the bezel sits flat.
4. Check that all control buttons are free to operate.

9.6 Fistmic mounting

The Fistmic can be mounted by following the steps below. Whilst only the Fistmic is pictured, you can also mount the Handset using the same Hook plate (mounting clip).

Before mounting the unit, ensure that you have:

- Selected a suitable location, ensuring there is nothing behind the mounting surface that may be damaged when drilling.

- Identified the cable connections and route that the cables will take.

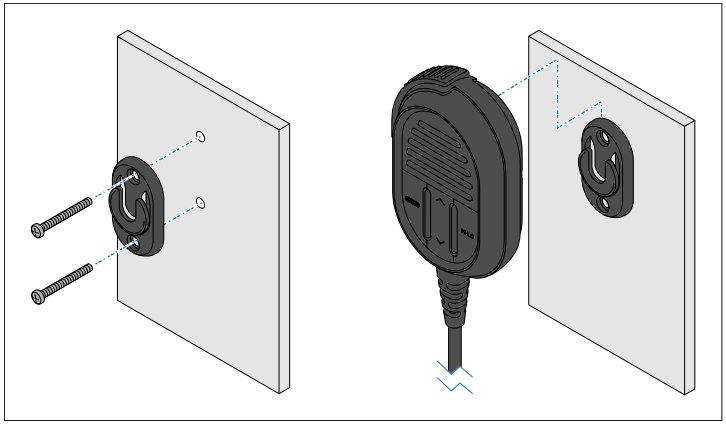

1. Check the selected location for the Hook plate, a clear flat area is required, with sufficient space around it to place and remove the Fistmic / Handset and coiled cable.
2. Using a pencil, offer up the Hook plate to the desired location and mark the location of the screw holes on the mounting surface.
3. Drill the mounting holes using a suitable size drill bit.
4. Hold the Hook plate in place and secure using the screws provided.
5. Hook the Fistmic / Handset over the Hook plate and gently push down until it clicks into position.

Note:

• The Fistmic can only be hooked and unhooked from the Hook plate when held vertically.

• Drill bit, tap size and tightening torque is dependent on the thickness and type of material the unit is to be mounted on.

9.7 Wired handset mounting using the holster

Follow the steps below to mount the wired handset.

Before mounting, ensure that your selected location meets the location requirements found in this document.

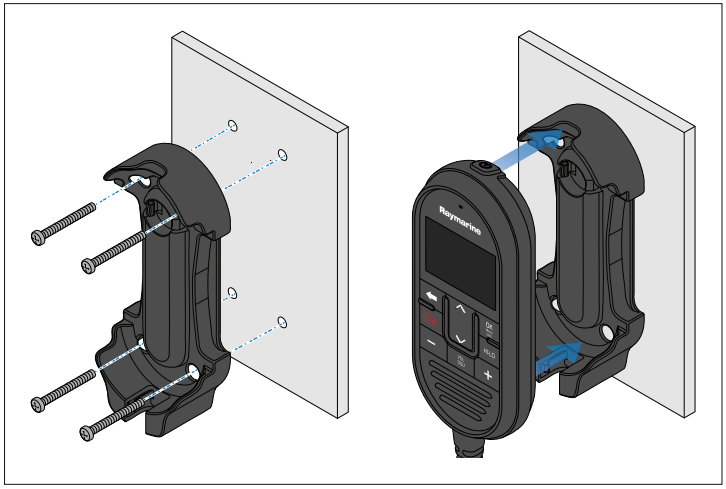

1. Check the selected location for the mounting holster, a clear flat area is required, with sufficient space around it to place and remove the handset.
2. Using a pencil, offer up the holster to the desired location and mark the location of the screw holes on the mounting surface.
3. Drill the mounting holes using a suitable size drill bit.
4. Hold the holster in place and secure using the screws provided.
5. Place the handset into the holster until it clicks into position.

9.8 Wired and wireless speaker mounting

Before mounting, ensure that your selected location meets the location requirements found in this document.

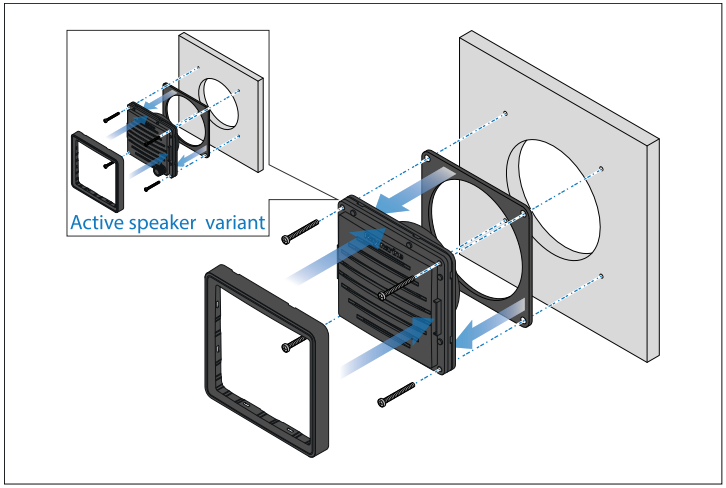

1. Remove the speaker's bezel.
2. Using the supplied mounting template, mark the location of the cut out and fixing holes on the mounting surface.
3. Using a 89 mm (3 ½ in) hole saw, drill out the centre cut out area indicated on the mounting template.
4. Drill holes for the fixings, using a drill with a suitable sized bit.
5. Ensure that the unit fits into the removed area and then file around the cut edge until smooth.
6. Peel the backing off of the supplied gasket and place the adhesive side of the gasket onto the rear of the speaker, pressing firmly onto the flange.
7. Connect the relevant cable to the speaker.
8. Slide the speaker into place and secure using the fixings provided.
9. Fit the Bezel, ensuring it clips into place on all 4 sides.

9.9 Pass-through panel kit mounting

When installing handsets, the pass-through panel kit should be used to secure the cable's connector to the panel the cable has to pass through.

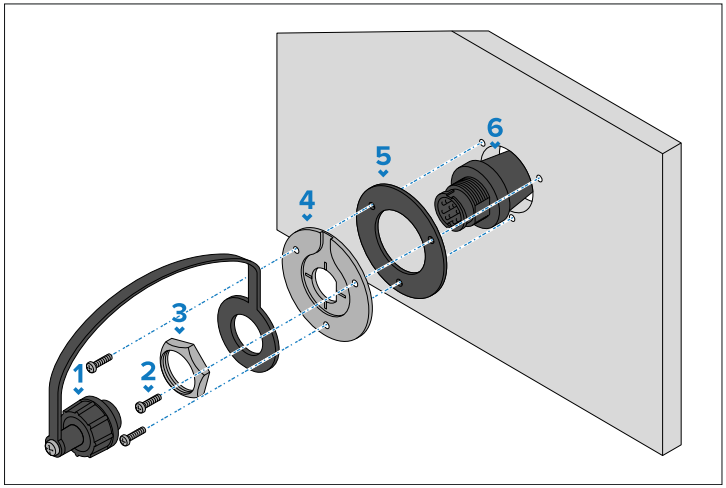

	Description
1	Splash-proof dust cap with lanyard.
2	Mounting plate fixings x 3.
3	Mounting plate nut.
4	Mounting plate.
5	Mounting plate gasket.
6	Extension cable.

1. Check the selected location for the Mounting plate, a clear flat area is required.

2. Ensuring correct orientation of the mounting plate, offer up the plate to the desired location and mark the location of the screw holes and the center hole on the mounting panel.

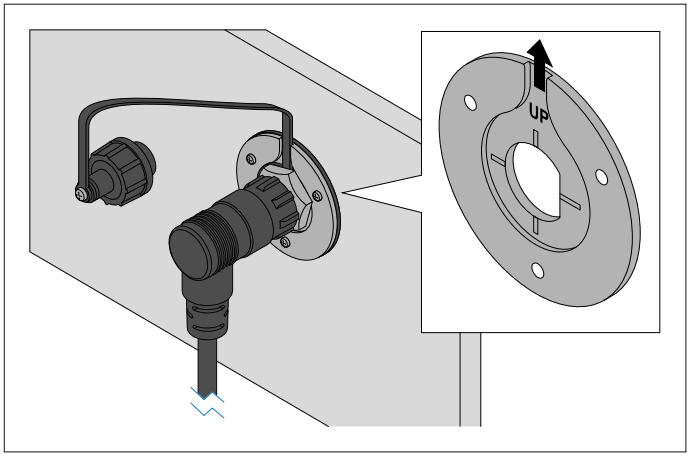

To ensure that the handset's connector points down when connected, orientate the mounting plate so that the lanyard groove is pointing straight up.

3. Drill the mounting holes using a suitable size drill bit.
4. Drill the center hole using a 25 mm (1 in.) hole cutting saw.
5. Pull the connector end of the cable through the hole in the mounting surface.
6. Place the Mounting plate gasket over the end of the connector.
7. With the recessed side facing away from the mounting panel, place the Mounting plate over the end of the connector.
8. Place the lanyard end of the Splash-proof dust cap over the connector, ensuring the lanyard sits in the recess in the Mounting plate.
9. Place the Mounting plate nut over the connector and tighten clockwise using a 13/16 in. (21 mm) socket wrench, being careful not to damage the plastic nut by overtightening.
10. Secure the Mounting plate to the mounting surface using the supplied screws.
11. Attach the Handset / Fistmic connector to the cable connector and rotate the locking collar clockwise to secure.
12. Connect the opposite end of the cable to the required connector either on the Base station or to another pass-through panel mounting plate connector.

Note:
Drill bit, tap size and tightening torque is dependent on the thickness and type of material the unit is to be mounted on.

9.10 Mounting the wireless hub

Before mounting, ensure that:

- Your selected location meets the location requirements found in this document.
- You pay particular attention to the wireless location requirements.
- Sufficient space is available above or to one side of the hub for the antenna.
- The product operates correctly at the desired location before mounting.

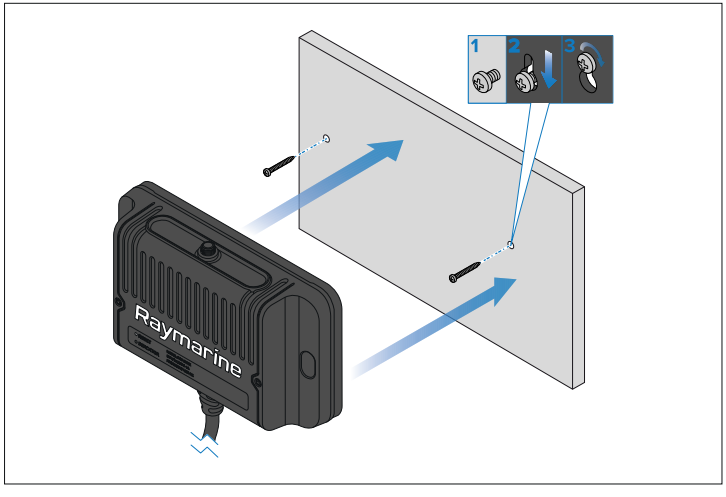

1. Using the supplied mounting template, mark the location of the fixing holes on the mounting surface.
2. Drill holes for the mounting fixings using a drill with a suitable sized drill bit.

3. Screw the fixings approximately half way into the holes in the mounting surface.
4. Place the Wireless hub over the fixing screws and push down to lock into positions
5. Fully tighten the screws.
6. Connect the antenna to the top of the hub.

Antenna orientation

Radio waves are emitted from the wireless hub perpendicular to the orientation of the hub's antenna.

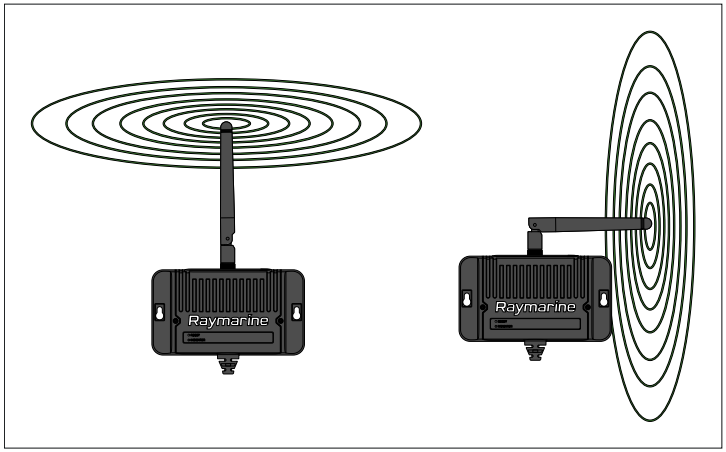

Keeping the antenna vertical should provide the best coverage for devices on the same plane as your hub. Positioning the antenna horizontally will provide better coverage above and below the hub.

Installing the wireless hub antenna extension accessory

An extension cable accessory (A80541) is available for the wireless hub's antenna. Using the extension, the distance from the wireless hub's antenna can be extended by an additional 5 m (16.4 ft).

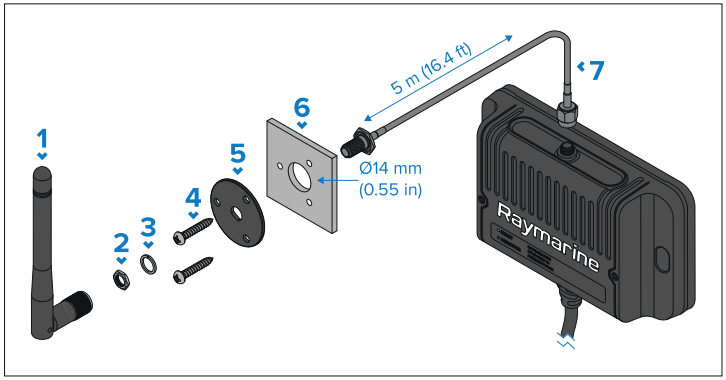

	Description
1	Antenna (supplied with the hub).
2	Nut.
3	M3x10 fixing screws x 3.
4	Mounting plate.
5	Mounting surface (14 mm (0.55 in) diameter hole required).
6	5 m (16.4 ft) antenna extension cable.
7	Split washer.
8	Wireless hub.

1. Check the selected location for the Mounting plate, a clear flat area is required.
2. Using a pencil, offer up the Mounting plate to the desired location and mark the location of the screw holes and the center hole on the mounting panel.
3. Drill holes for the mounting fixings using a drill with a suitable sized drill bit.
4. Drill the center hole using a 14 mm (0.55 in) drill/hole cutter.

5. Pull the connector end with the exposed thread through the center hole.
6. Place the mounting plate over the end of the connector.
7. Place the split washer and nut over the end of the connector and secure by hand tightening the nut.
8. Secure the mounting plate to the mounting surface using the supplied screws.
9. Screw the antenna supplied with your hub to the connector.
10. Connect the opposite end of the extension cable to the antenna connector located on the top of the wireless hub.

9.11 Mounting the charging holster for the wireless handset

Before mounting, ensure that:

- Your selected location meets the location requirements found in this document.
- You pay particular attention to the wireless location requirements.
- The product operates correctly at the desired location before mounting.
- The product does not interfere with nearby devices.

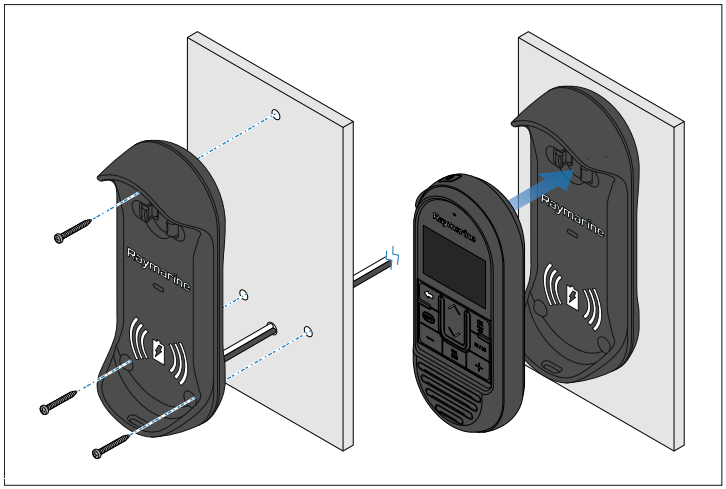

1. Using the supplied mounting template mark the location of the mounting holes and if required, the cable hole.
2. Drill the mounting holes using a suitable size drill bit.
3. If required, use a 6.5 mm (0.26 in) drill bit to drill a hole for the holster's power cable.
4. Hold the holster in place and secure using the screws provided.
5. Place the Handset into the holster, ensuring it clicks into position.

CHAPTER 10: NETWORK CONNECTIONS

CHAPTER CONTENTS

- 10.1 Connections overview — Ray53 — page 63
- 10.2 Connections overview — Ray63 / Ray73 — page 63
- 10.3 Connecting a VHF antenna — page 64
- 10.4 GNSS (GPS) antenna connection — page 65
- 10.5 Passive speaker connection — page 65
- 10.6 Fistmic connection (Ray63 / Ray73 only) — page 65
- 10.7 Secondary handset station (Ray63 / Ray73 only) — page 66
- 10.8 Wireless hub connection (Ray63 / Ray73 only) — page 67
- 10.9 Wireless handset connections (Ray63 / Ray73 only) — page 67

10.1 Connections overview — Ray53

The following connections are available on the Ray53.

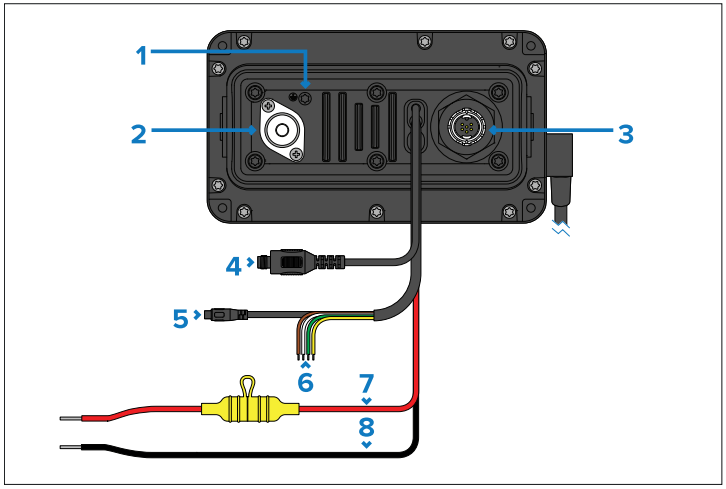

1. Grounding point — **DO NOT USE!**
2. SO239 VHF antenna connection.
3. SeaTalk NG connection.
4. TNC external GNSS (GPS) antenna connection.
5. RCA Audio connection.
6. NMEA 0183 connection.
7. Red wire (positive) — connects to the power supply's positive terminal.
8. Black wire (negative) — connects to the power supply's negative terminal.

10.2 Connections overview — Ray63 / Ray73

The following connections are available on the Ray63 and Ray73.

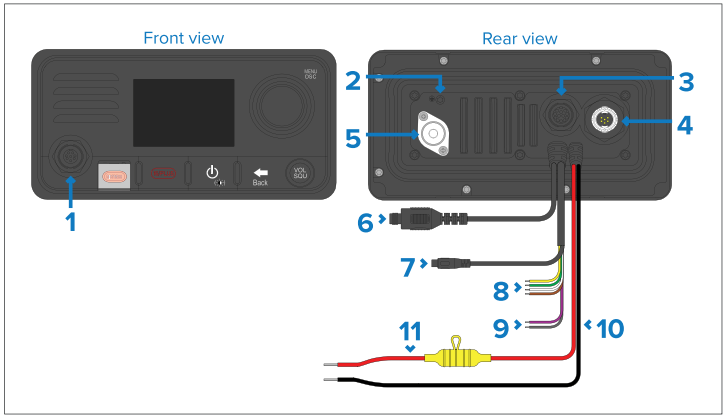

1. Primary station (8-pin) connection.
2. Grounding point — **DO NOT USE!**
3. Second station (12-pin) connection.
4. SeaTalk NG connection.
5. S0239 VHF antenna connection.
6. TNC GNSS (GPS) connection.
7. RCA Audio connection.
8. NMEA 0183.
9. Loud hailer connection (Ray73 only).
10. Black wire (negative) — connects to the power supply's negative terminal.
11. Red wire (positive) — connects to the power supply's positive terminal.

Primary and secondary station connectors

The connectors below are used to connect the supplied Fistmic and / or the optional Wired (Raymic) handset to the Base station.

Connector	Description	Connects to
	Primary station connector (8-pin front Fistmic connector).	• Fistmic (supplied).
	Secondary station connector (12-pin rear handset connector).	• Wireless hub via adaptor (R70739). • Wired handset. • Wired handset via Handset extension cables (A80291, A80292, A80290). • Fistmic via Fistmic adaptor cable (A80296). • Wired handset via Handset adaptor cable (A80297).

10.3 Connecting a VHF antenna

The radio must be connected to a suitable VHF antenna (not supplied). The antenna connection must be protected so it cannot come into contact with any bare metal (which may be grounded). A protective boot is supplied that can be used to ensure isolation of the antenna connection.

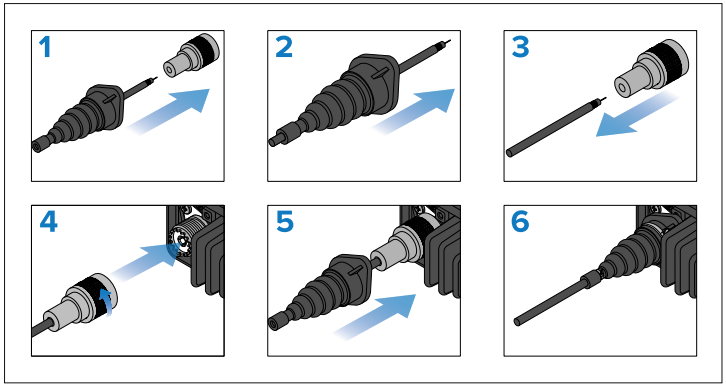

1. Disconnect your antenna cable from the connector.
2. Push the antenna cable through the supplied protective boot.
3. Re-connect the antenna cable to the connector.
4. Plug the antenna connector into the product's antenna connection and secure by tightening the locking collar.
5. Push the protective boot over the connection.
6. Secure the protective boot using the supplied cable ties.

If the antenna connector cannot be removed then another suitable means of protection must be used, such as insulation tape.

10.4 GNSS (GPS) antenna connection

You can improve the performance of your radio's built-in GNSS (GPS) receiver using an external antenna.

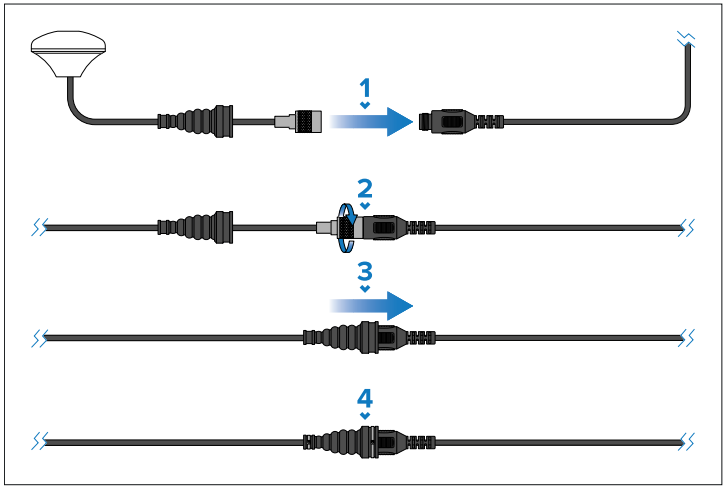

Follow the steps below to connect the external antenna:

1. Remove the dust cap from the external antenna connector on your radio. Ensuring correct connector orientation, fully insert the external antenna connector into the GA150's connector.
2. Tighten the antenna connector's locking collar by rotating the GA150's connector clockwise until tight.
3. Push the protective boot into position over both connectors.
4. Secure the protective boot using a cable tie on each end.

10.5 Passive speaker connection

A passive speaker (A80542) can be connected using the RCA lead on the radio or on the handset adaptor cable.

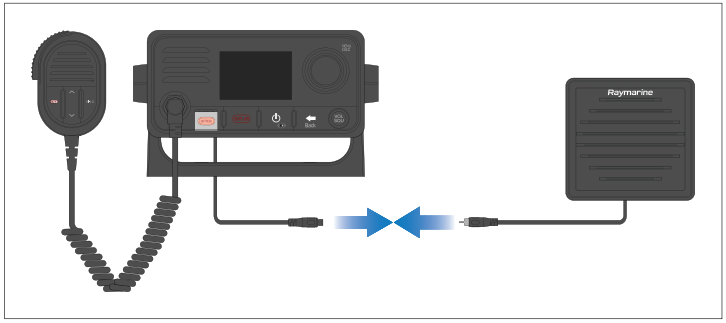

10.6 Fistmic connection (Ray63 / Ray73 only)

The Fistmic can be connected directly to the front connector on your Radio.

Front connection

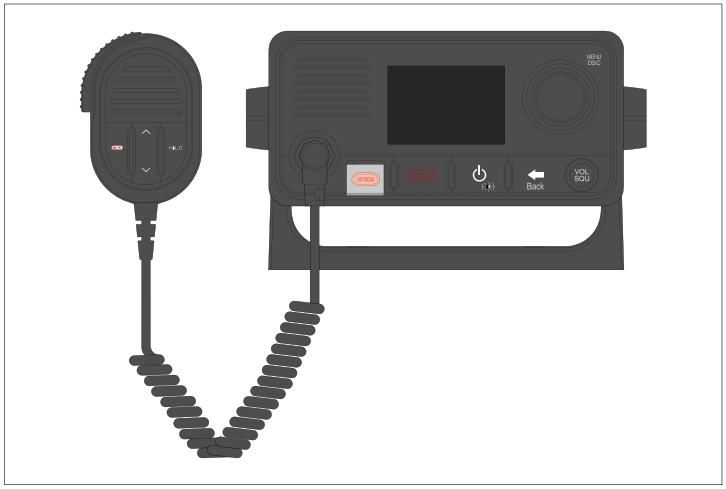

The Fistmic can also be connected to the Rear station connection using the appropriate adaptor cables.

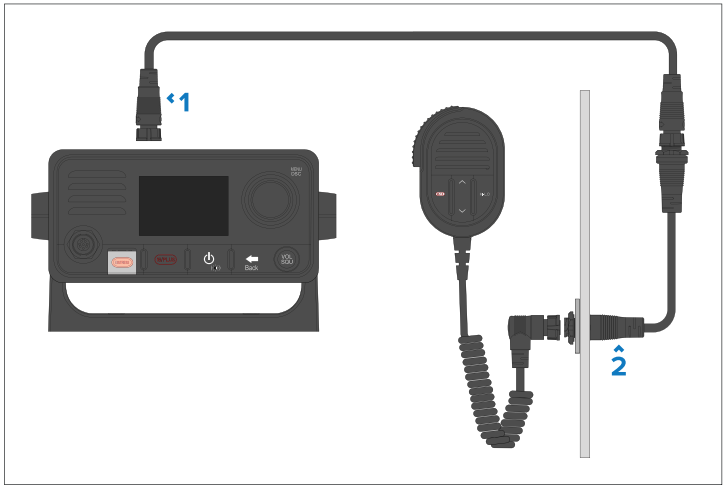

1. Handset extension cable (A80291)
2. Fistmic adaptor cable (A80296)

The Fistmic must NOT be used to create a second station, as the operator will not have access to all Radio functions or the information displayed on the Radio's LCD screen.

10.7 Secondary handset station (Ray63 / Ray73 only)

The Raymic handset accessory can be connected to the Secondary station connector located on the rear of the radio, this will create a second fully functional station.

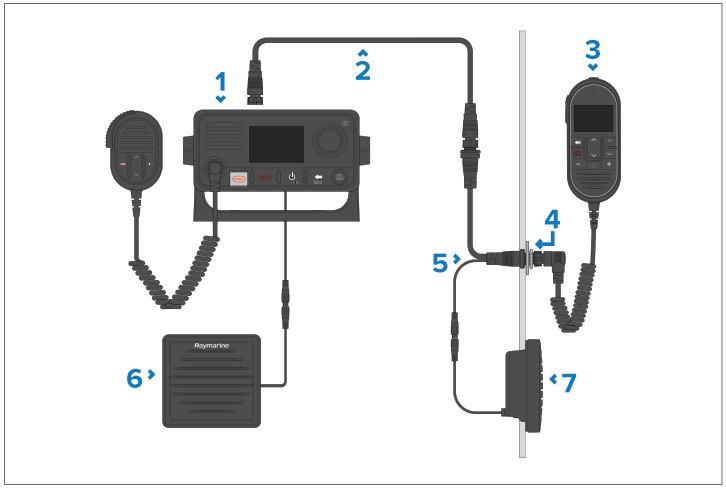

1. Primary station (Radio base station).
2. Handset extension cable (A80290, A80291 or A80292).
3. Secondary station handset (A80289).
4. Panel mount fixings kit (R70438).
5. Handset adaptor cable with RCA audio (A80297).
6. Primary station passive speaker (A80542).
7. Secondary station passive speaker (A80542).

The Fistmic must NOT be used to create a second station, as the operator will not have access to all Radio functions or the information displayed on the Radio's LCD screen.

Wired handset extension cables

Handset station cabling can be extended using approved extension cables.

The maximum length of cable from the Handset to the Base station should not exceed 50 m (164.04 ft).

Connecting handsets and cables

Follow the steps below to connect handsets and extension cables together.

1. If fitted, unscrew and remove the dust cap from the relevant connector.
2. Ensure the cable connectors are correctly orientated, before insertion.
3. Ensure connectors are fully inserted, before locking.
4. Tighten locking collars by Rotating clockwise.

10.8 Wireless hub connection (Ray63 / Ray73 only)

The Wireless hub connects to the second station connector on the rear of the Ray63 / Ray73 radios using the Wireless hub adaptor. The Wireless hub allows connection of wireless handset stations.

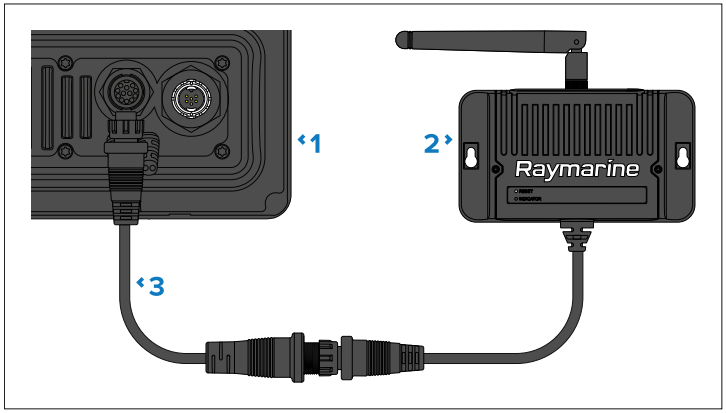

1. Ray63 / Ray73 VHF radio.
2. Wireless hub A80540.
3. Wireless hub adaptor (R70739).

10.9 Wireless handset connections (Ray63 / Ray73 only)

The Wireless handset connects wirelessly to the Wireless hub, and the Wireless speaker connects wirelessly to the Wireless handset.

Up to 2 Wireless handsets can be connected to the Wireless hub. For more connection information, refer to the following section:
p.96 — Connecting a wireless handset to the hub

One Wireless speaker can be connected to each Wireless handset. For more connection information, refer to the following section:
p.98 — Connecting the wireless speaker to the Wireless handset

CHAPTER 11: NMEA 0183 CONNECTIONS

CHAPTER CONTENTS

- 11.1 NMEA 0183 connection — page 69

11.1 NMEA 0183 connection

The NMEA 0183 wires can be used to connect the unit to a NMEA 0183 GNSS (GPS) receiver or MFD.

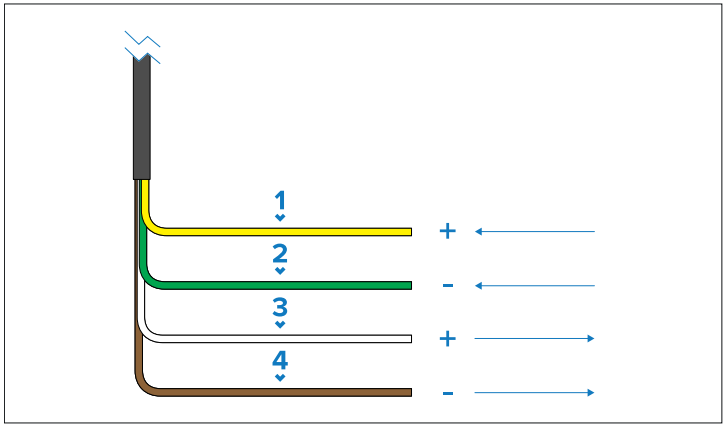

1. Yellow = Receive positive (+) wire.
2. Green = Receive negative (-) wire.
3. White = Transmit positive (+) wire.
4. Brown = Transmit negative (-) wire.

The NMEA® wires should be connected to a compatible device as shown in the table below:

NMEA 0183 wires	NMEA 0183 device
Receive positive (+), connects to:	Transmit positive (+)
Receive negative (-), connects to:	Transmit negative (-)
Transmit positive (+), connects to:	Receive positive (+)
Transmit negative (-), connects to:	Receive negative (-)

CHAPTER 12: NMEA 2000 CONNECTION

CHAPTER CONTENTS

- 12.1 SeaTalk NG / NMEA 2000 connection — page 71

12.1 SeaTalk NG / NMEA 2000 connection

Your product can transmit and receive data to and from devices connected on SeaTalk NG or NMEA 2000 CAN bus networks. Connection is established using the SeaTalk NG connector located on the rear of the unit.

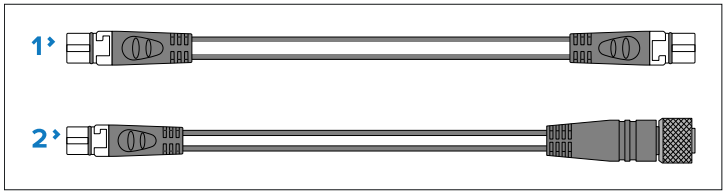

1. Use the supplied SeaTalk NG spur cable to connect your product to your SeaTalk NG network.
2. You can also use a DeviceNet to SeaTalk NG adaptor cable (not supplied) to connect your product to an available spur on a NMEA 2000 network.

Note:

1. The product must be connected to a correctly terminated backbone.
2. You cannot connect your product directly to a MFD.
3. Refer to the instructions supplied with your SeaTalk NG / NMEA 2000 device for details on creating a backbone.

Connecting SeaTalk NG cables

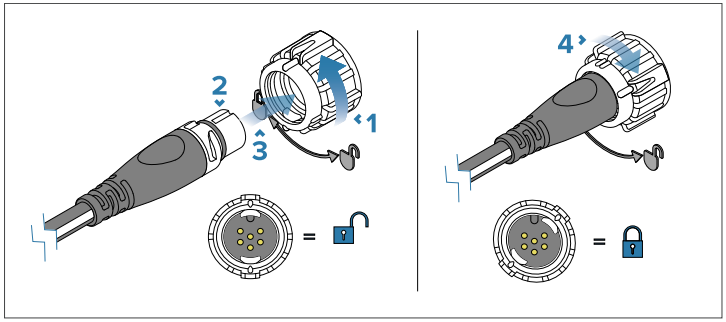

1. Rotate your product's SeaTalk NG connector locking collar counter clockwise, so that the connector is in the unlocked position.
2. Ensure the cable's connector is correctly oriented (groove pointing up).
3. Fully insert the cable connector.
4. Rotate the locking collar clockwise (2 clicks) until it is in the locked position.

CHAPTER 13: LOUD HAILER CONNECTION

CHAPTER CONTENTS

- 13.1 Loud hailer connection (Ray73 only) — page 73

13.1 Loud hailer connection (Ray73 only)

A Loud hailer (M95435) can be connected to the radio using the loud hailer wires.

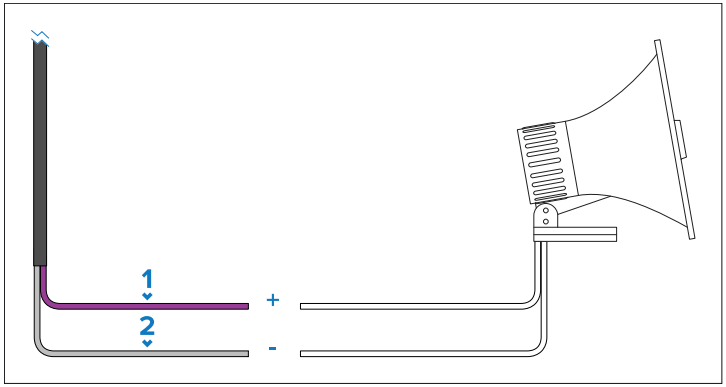

	Description
1	Positive (+) hailer wire (Purple)
2	Negative (-) hailer wire (Gray)

CHAPTER 14: POWER CONNECTIONS

CHAPTER CONTENTS

- 14.1 Power connection — page 75
- 14.2 In-line fuse and thermal breaker ratings — page 75
- 14.3 Power distribution — page 75
- 14.4 Power cable extension (12 V systems) — page 77
- 14.5 Wireless handset charging holster – power connection (Ray63 / Ray73 only) — page 78
- 14.6 Wireless speaker – power connection (Ray63 / Ray73 only) — page 78

14.1 Power connection

The power for the radio is provided directly by a 12 V power source.

The radio should be connected as shown below:

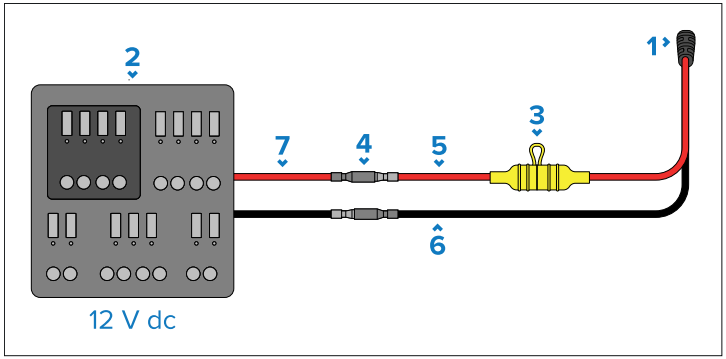

1. Radio's fitted power cable.
2. 12 V dc power source (i.e.: Distribution panel).
3. Waterproof fuse holder containing a suitably-rated inline fuse (**Supplied**), which must be fitted to the red positive wire — refer to the fuse ratings below.
4. Suitable waterproof connection (Radio is supplied with bullet crimps on power supply wires.)
5. Power supply positive (+) Red wire
6. Power supply negative (-) Black wire.
7. If, required you can extend the power cable supplied with your radio, using suitably rated cabling.

Warning: 12 Volt dc only

This product must ONLY be connected to a 12 V dc power source.

Warning: Grounding not required

This product does NOT require separate grounding.

Warning: Chassis grounding

Do NOT ground this product using the chassis ground terminal.

Grounding this product to a vessel's RF ground may cause galvanic corrosion.

Warning: Positive ground systems

Do NOT connect this unit to a system which has positive grounding.

14.2 In-line fuse and thermal breaker ratings

The following in-line fuse and thermal breaker ratings apply to your product:

In-line fuse rating	Thermal breaker rating
10 A	7 A (if only connecting one device).

Note:

• The suitable fuse rating for the thermal breaker is dependent on the number of devices you are connecting. If in doubt consult an authorized Raymarine® dealer.

• If your product's power cable does not have a fitted in-line fuse, add an in-line fuse to the positive wire of your product's power connection.

14.3 Power distribution

Recommendations and best practice.

- The product is supplied with a power cable, either as a separate item or a captive cable permanently attached to the product. Only

use the power cable supplied with the product. Do NOT use a power cable designed for, or supplied with, a different product.

- Refer to the *Power connection* section for more information on how to identify the wires in your product's power cable, and where to connect them.
- See below for more information on implementation for some common power distribution scenarios:

Important:

• When planning and wiring, take into consideration other products in your system, some of which (e.g. sonar modules) may place large power demand peaks on the vessel's electrical system, which may impact the voltage available to other products during the peaks.

• The information provided below is for guidance only, to help protect your product. It covers common vessel power arrangements, but does NOT cover every scenario. If you are unsure how to provide the correct level of protection, please consult an authorized dealer or a suitably qualified professional marine electrician.

Implementation — connection to distribution panel (Recommended)

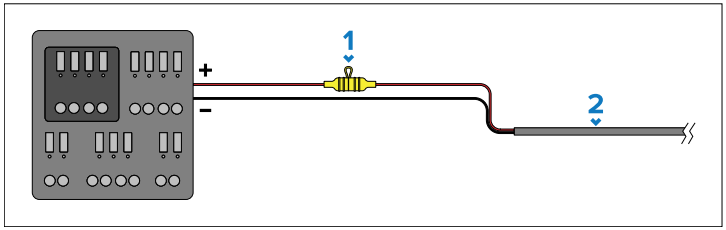

	Description
1	Waterproof fuse holder containing a suitably-rated inline fuse must be fitted. For suitable fuse rating, refer to: *Inline fuse and thermal breaker ratings*.
2	Product power cable.

- It is recommended that the supplied power cable is connected to a suitable breaker or switch on the vessel's distribution panel or factory-fitted power distribution point.
- The distribution point should be fed from the vessel's primary power source by 8 AWG (8.36 mm²) cable.
- Ideally, all equipment should be wired to individual suitably-rated thermal breakers or fuses, with appropriate circuit protection. Where this is not possible and more than one item of equipment shares a breaker, use individual inline fuses for each power circuit to provide the necessary protection.

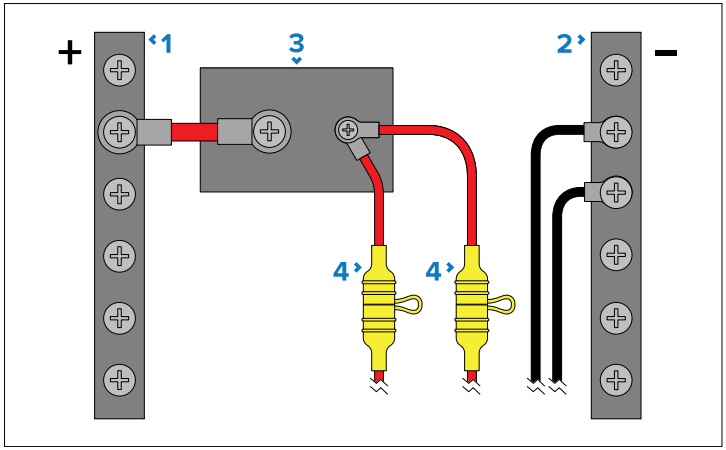

	Description
1	Positive (+) bar
2	Negative (-) bar
3	Circuit breaker
4	Waterproof fuse holder containing a suitably-rated inline fuse must be fitted. For suitable fuse rating, refer to: *Inline fuse and thermal breaker ratings*.

Important:
Observe the recommended fuse / breaker ratings provided in the product's documentation, however be aware that the suitable fuse / breaker rating is dependent on the number of devices being connected.

Implementation — direct connection to battery

- Where connection to a power distribution panel is not possible, the power cable supplied with your product may be connected directly to the vessel's battery, via a suitably rated fuse or breaker.
- The power cable supplied with your product does NOT include a separate drain wire. Therefore, only the power cable's red and black wires need to be connected.
- If the power cable is NOT supplied with a fitted inline fuse, you MUST fit a suitably rated fuse or breaker between the red wire and the battery's positive terminal.
- Refer to the inline fuse ratings provided in the product's documentation.
- If you need to extend the length of the power cable supplied with your product, ensure you observe the dedicated *Power cable extensions* advice provided in the product's documentation.

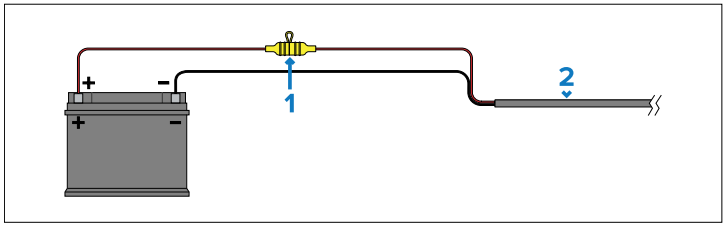

	Description
1	Waterproof fuse holder containing a suitably-rated inline fuse must be fitted. For suitable fuse rating, refer to: *Inline fuse and thermal breaker ratings*.
2	Product power cable.

More information

It is recommended that best practice is observed in all vessel electrical installations, as detailed in the following standards:

- BMEA Code of Practice for Electrical and Electronic Installations in Boats
- NMEA 0400 Installation Standard
- ISO 13297: Small craft — Electrical systems — Alternating and direct current installations
- ISO 10133: Small craft — Electrical systems — Extra-low-voltage d.c. installations
- ABYC E-11 AC & DC Electrical Systems on Boats
- ABYC A-31 Battery chargers and Inverters
- ABYC TE-4 Lightning Protection

14.4 Power cable extension (12 V systems)

If you need to extend the length of the power cable supplied with your product, ensure you observe the following advice:

- The power cable for each unit in your system should be run as a separate, single length of 2-wire cable from the unit to the vessel's battery or distribution panel.
- Ensure that the extension cable is of a sufficient gauge for the supply voltage, the total current load of the device, and the length of the cable run — as the cable run length increases, the greater the voltage drop will be from one end of the power cable to the other.
- Refer to the following table for typical **minimum** power cable wire gauges:

Cable length in meters (feet)	Wire gauge in AWG (mm^2) for 12 V supply
<8 (<25)	16 (1.31 mm^2)
16 (50)	14 (2.08 mm^2)
24 (75)	12 (3.31 mm^2)
>32 (>100)	10 (5.26 mm^2)

Important:
Be aware that some products in your system (such as sonar modules) can create voltage peaks at certain times, which may impact the voltage available to other products during the peaks.

Important:
To ensure power cables (including any extension) are of a sufficient gauge, ensure that there is a continuous **minimum** voltage of **10.8 V dc** at the end of the cable where it enters the product's power connector, even with a fully flat battery at 11 V dc. (Do not assume that a flat battery is at 0 V dc. Due to the discharge profile and internal chemistry of batteries, the current drops much faster than the voltage. A "fully flat" battery still shows a positive voltage, even if it doesn't have enough current to power your device.)

14.5 Wireless handset charging holster – power connection (Ray63 / Ray73 only)

To enable inductive charging of the wireless handset, the holster requires a 12 V dc power supply. The power cables should be connected via a distribution panel or, if required directly to a battery.

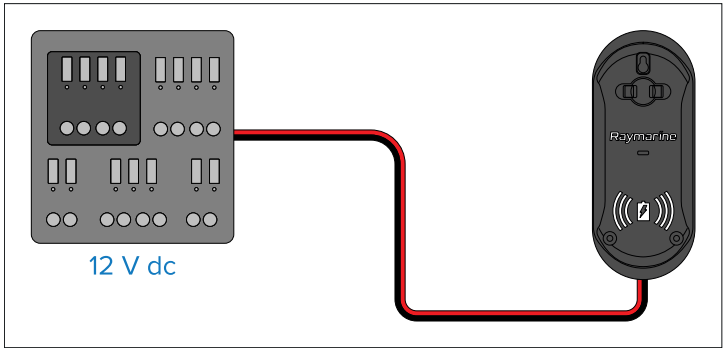

Refer to the following section for guidance on connecting to a power supply: **p.75 — Power distribution**

In-line fuse and thermal breaker ratings

The wireless speaker is internally fused, however it is recommended that you fit an inline fuse on the positive wire of your product's power cable or connect using a thermal breaker.

In-line fuse rating	Thermal breaker rating
2 A	2 A (refer to note below)

Note:

• The suitable fuse rating for the thermal breaker is dependent on the number of devices you are connecting. If in doubt consult an authorized Raymarine® dealer.

14.6 Wireless speaker – power connection (Ray63 / Ray73 only)

The wireless speaker is an active speaker that requires a 12 V dc power supply. The power cables should be connected via a distribution panel or, if required, directly to a battery.

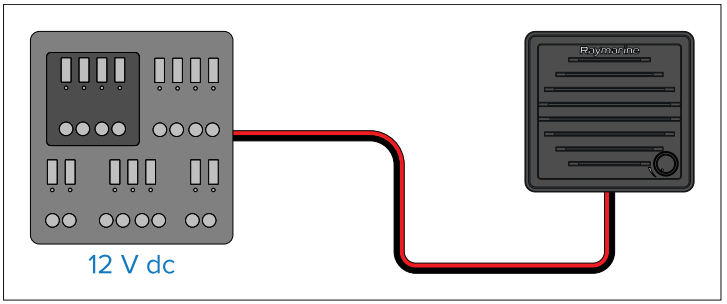

Refer to the following section for guidance on connecting to a power supply: **p.75 — Power distribution**

In-line fuse and thermal breaker ratings

The wireless speaker is internally fused, however it is recommended that you fit an inline fuse on the positive wire of your product's power cable or connect using a thermal breaker.

In-line fuse rating	Thermal breaker rating
2 A	2 A (refer to note below)

Note:

• The suitable fuse rating for the thermal breaker is dependent on the number of devices you are connecting. If in doubt consult an authorized Raymarine® dealer.

CHAPTER 15: GETTING STARTED

CHAPTER CONTENTS

- 15.1 Licensing — page 81
- 15.2 General radio operating rules — page 81
- 15.3 Controls and interface — page 81
- 15.4 Handset controls — page 82
- 15.5 Powering the unit on — page 83
- 15.6 Powering the unit off — page 83
- 15.7 Homescreen overview — page 84
- 15.8 Shortcut list — page 87
- 15.9 Shared Brightness — page 87
- 15.10 Initial startup — page 88
- 15.11 Accessing the menu — page 89
- 15.12 Selecting a language — page 89
- 15.13 Switching on the AIS receiver — page 89
- 15.14 Selecting a network type — page 89
- 15.15 Entering your MMSI number — page 90
- 15.16 Entering your ATIS ID — page 91
- 15.17 Changing the radio region — page 92
- 15.18 Switching between high and low transmit power — page 93
- 15.19 GNSS (GPS) set up — page 93
- 15.20 Station priority (Ray63 and Ray73 only) — page 94

15.1 Licensing

Prior to using this product for the first time, please check your national requirements for both operator and equipment licensing.

Important:
It is your responsibility to determine whether a license is required in your area before operating this equipment.

In many regions, the following authorizations are required from the relevant regulatory authority:

1. Ship Station VHF license;
2. Operator's license;
3. MMSI (Maritime Mobile Service Identity) number.

Licenses are typically issued by the National Regulatory Authorities (NRAs) in each country.

For a list of license and MMSI issuing authorities, refer to:
p.158 — Licensing and MMSI issuing authorities

Important:
It may also be necessary to obtain an Operator's license before an MMSI number can be obtained for your vessel. The DSC functions of the radio will not work without a valid MMSI number. For more information, refer to:
p.31 — Obtain MMSI (Maritime Mobile Service Identity) number

15.2 General radio operating rules

Important general rules to abide by when operating VHF radios.

1. Always identify yourself using a callsign when making calls or sending messages; however, do NOT use your personal name to identify yourself.
2. Do NOT transmit without the authority of the master of the vessel.
3. Do NOT transmit without the authority of a person with the authority to operate the radio.
4. Do NOT transmit a false distress call.
5. Do NOT turn off your radio before finishing all operations related to a distress or urgency.
6. Do NOT broadcast (i.e. transmitting without expecting a response).
7. Do NOT make unnecessary transmissions.
8. Avoid the use of profanities.
9. Only use marine frequencies.
10. Do NOT broadcast music.
11. Do NOT transmit a message intended for an address onshore in place of a phone.
12. Do NOT transmit a message which is intended for a shore-based station.
13. Maintain confidentiality in all conversations.

15.3 Controls and interface

The controls and interface available are as follows:

Base station

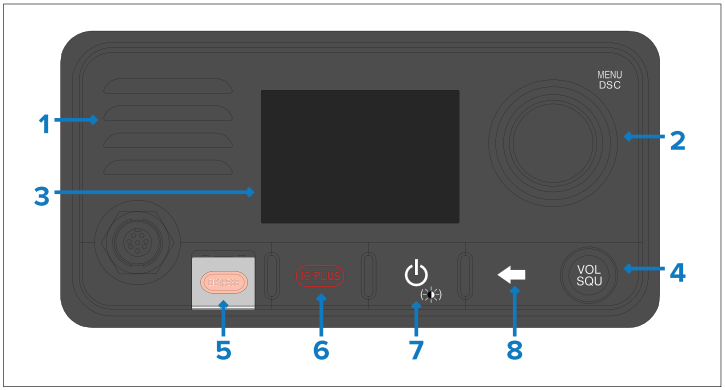

1. **Built-in speaker**.
2. *[Rotary knob]* with center *[OK]* push button — Press knob in to access menu and DSC functions and to confirm selections. Turn rotary clockwise or anti-clockwise to move up and down through menu items or to change channel from the Homescreen.
3. **LCD**.
4. *[VOL/SQU]* — Turn knob to adjust volume or squelch up and down. Press center button to switch between volume and squelch control.

5. *[DISTRESS]* — Push up the spring loaded cover and press this button to make a DSC distress call.
6. *[16 / +]* — When powered on press to switch between priority channels.
7. *[Power]* — Press to power the unit on. Press and hold for 3 seconds to power the unit off. Momentary press to access the shortcut list.
8. *[Back]* — Move back through menu options.

Fistmic

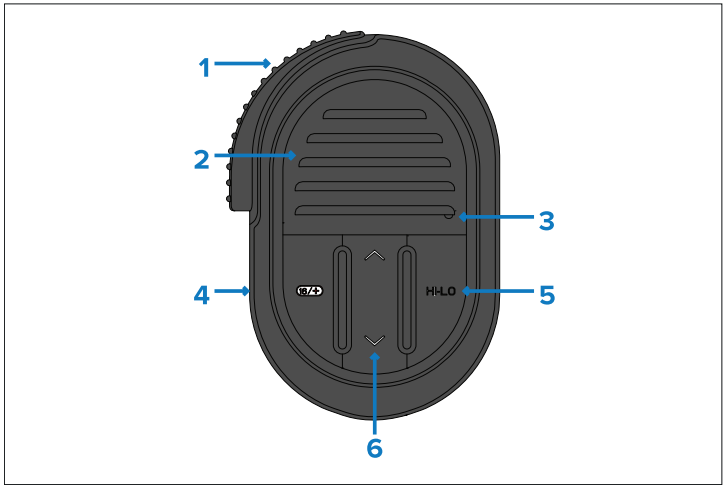

1. *[PTT (Push to Talk)]* — Press and hold to send a voice message. Release to return to receive mode.

Note:
The maximum transmit time is limited to 5 minutes to prevent un-intentional transmissions from occupying the VHF channel.

2. **Speaker**.
3. **Microphone location**.
4. *[16 / +]* — When powered on press to switch between priority channels.
5. *[HI/LO]* — Press to switch between High (25 W) and low (1 W) transmit power.
6. *[Channel Up / Channel Down]* — Changes the channel up or down.

15.4 Handset controls

Overview of handset controls.

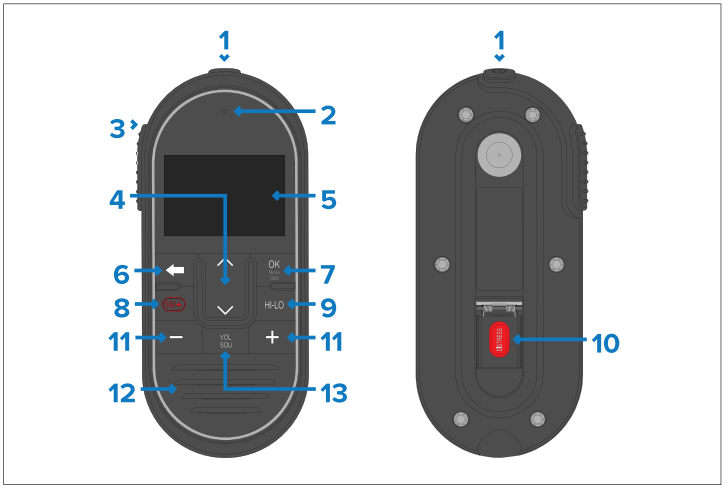

1. *[Power]* — Press to power the handset on. Press and hold for 3 seconds to power the handset off. Momentary press to access the shortcut list.
2. **Microphone location**.
3. *[PTT]* (Push to Talk) — Press and hold to send a voice message. Release to return to receive mode.

Note:
The maximum transmit time is limited to 5 minutes to prevent unintentional transmissions from occupying the VHF channel.

4. *[Channel Up]* and *[Channel Down]* — Changes to the next or previous VHF channel, also used to select or adjust options in the menu.
5. **LCD display**.
6. *[Back]* — Go to the previous menu / screen. Press and hold to return to the Homescreen.

7. *[OK / menu button]* — Press button to access menu / DSC functions and to confirm selections.
8. *[16 / +]* — When powered on press to switch between priority channels.
9. *[HI/LO]* — Press to switch between High (25 W) and Low (1 W) transmit power.
10. *[DISTRESS]* — Lift up the spring-loaded cover and press this button to make a DSC distress call.
11. *[Volume Up]* and *[Volume Down]* — Press to adjust volume or squelch intensity up or down.
12. *[Built-in speaker]*.
13. *[VOL/SQ]* — Press button to switch between volume and squelch controls.

15.5 Powering the unit on

With the radio connected to a power supply the power button is used to switch the radio on and off.

1. Press the *[Power]* button to power-up the radio.

   The startup is displayed.

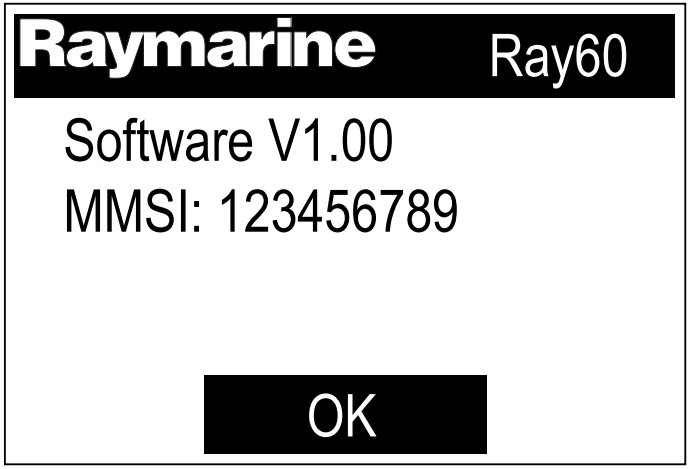

   The startup screen will automatically time-out after 5 seconds.

2. Press the *[OK]* button, or wait for the startup screen to time-out.

   The Homescreen is displayed.

Powering the handset

To power the Handset on and off follow the steps below.

With the Base station powered On:

1. Press and hold the *[Power]* button, located on the top of the Handset, for 2 seconds.

   The Handset will power on.

2. To power off the Handset, press and hold the *[Power]* button for approximately 3 seconds, until the screen turns off.

15.6 Powering the unit off

With the unit powered on:

1. Press and hold the *[Power]* button for approximately 3 seconds to power the unit off.

15.7 Homescreen overview

The information below describes the on-screen characters and symbols which are shown on the Homescreen.

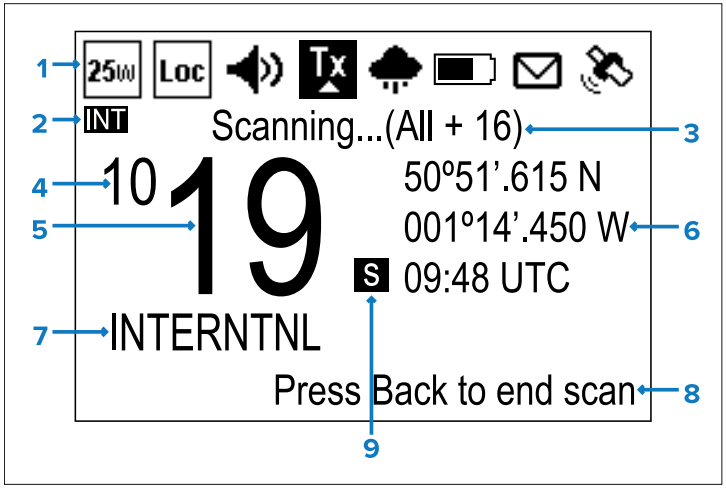

1. **Status bar** — The status bar displays symbols which indicate the current status of the unit.
2. **Frequency band** — Indicates which channel frequency band is in use:
   - USA — United States of America
   - INT — International
   - CAN — Canada
   - WX — Weather

Note:
Special licensing is required to receive USA and Canadian channel sets.

3. **Status text** — Indicates the current radio mode e.g.: ATIS Mode active, Weather Alert, Scan mode etc.
4. **New 4 digit channels** — Identifies the first 2 digits when the radio is set to one of the new 4 digit simplex channels.
5. **Channel** — Indicates the current channel number, or the last 2 digits when set to a 4 digit channel.
6. **Location / Time** or **Location / COG/SOG** — Depending on selection displays Location coordinates and current time or Location coordinates and current COG and SOG.
7. **Channel Name** — Indicates the name of the current channel.
8. **Optional text** — Provides extra user guidance.
9. **Channel type** — Indicates the type of channel:
   - **s** = Simplex — Simplex channels transmit and receive on the same frequency.
   - **d** = Duplex — Duplex channels use separate frequencies to transmit and receive.

Status bar symbols

The status bar is used to display symbols that indicate the radio's status.

Symbol	Name	Description
1W	Low power	Indicates the radio transmitters is in low power (1 watt) or high power (25 watt) mode
25W	High power	Indicates the radio transmitters is in low power (1 watt) or high power (25 watt) mode
Loc	Local	Indicates the radio is in local reception mode, which decreases receiver sensitivity in high traffic areas to decrease unwanted reception

Symbol	Name	Description
	Fog horn	Indicates that the radio is in Fog horn mode.
	Transmit	Indicates the radio is currently transmitting (e.g. the PTT button is being pressed.)
	Receive	Indicates the radio is currently receiving a transmission.
	Weather	Indicates that the weather alerts mode is activated.
	Power supply voltage too low	Indicates the power supply to the radio is below the specified operating voltage.
	Power supply voltage too high	Indicates the power supply to the radio is above the specified operating voltage.

Symbol	Name	Description
	DSC	Indicates that a DSC call has been received
	GNSS (GPS) Fix	Indicates if the radio has a GNSS (GPS) fix.

Main menu overview

The main menu is accessed by Pressing the *[OK]* button from the *[Homescreen]*.

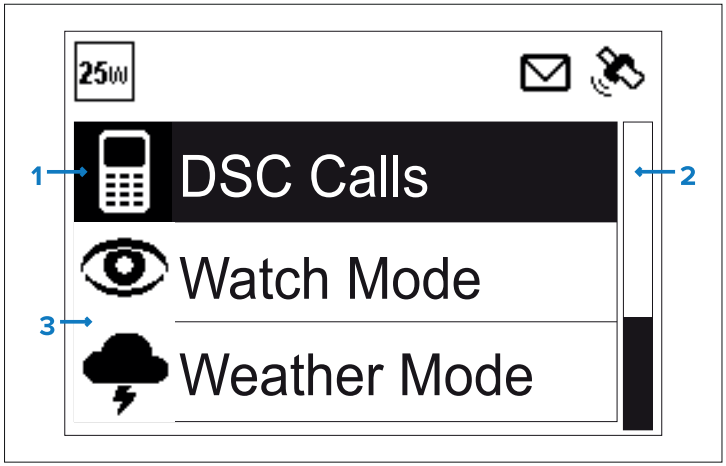

1. Currently selected menu item
2. Scroll bar
3. Menu items

The main menu includes the following items:

Symbol	Name	Sub-options
	* *[DSC Calls]*	• *[Individual call]* • *[Distress call]* • *[Position request]* • *[Group call]* • *[All ships call]* • *[Phonebook]* • *[Call logs]* • *[Test call]* • *[DSC set-up]*
	* *[Watch Mode]*	• *[Dual watch]* • *[Triple watch]* • *[2nd priority channel]*
	* *[Weather Mode]*	• *[Weather Homescreen]*
	* *[Scan Mode]*	• *[All channels]* • *[All channels + 16]* • *[Saved channels]* • *[Saved channels + 16]* • *[Edit saved channels]*
	** *[Hail/F-og/Inter-com]*	• *[Hailer]* • *[Fog horn]* • *[Intercom]*

Symbol	Name	Sub-options
	** *[Hailer/Fog horn]*	• *[Hailer]* • *[Fog horn]*
	** *[Intercom]*	• *[Intercom]*
	[Set-up]	• *[Display set-up]* • *[Language]* • *[Units]* • *[Power output]* • *[Sensitivity]* • *[Noise cancelling (Tx)]* • ** *[Wireless set-up]* • *[Handset name]* • *[Key beep]* • *[Channel set-up]* • *[Weather alerts]* • *[GPS set-up]* • *[DSC set-up]* • *[AIS]* • *[Network output]* • *[ATIS set-up]* • *[Maintenance]*

Note:
* These menu items are not available when the radio has ATIS enabled, or if the radio has been pre-programmed in MARCOM-C mode.
** These menu items are only available when compatible accessories are connected to the radio.

15.8 Shortcut list

Pressing the *[Power]* button once while the radio is switched on will open the *[Shortcuts list]*. The Shortcuts list can be used to adjust the brightness, contrast and access frequently used functions.

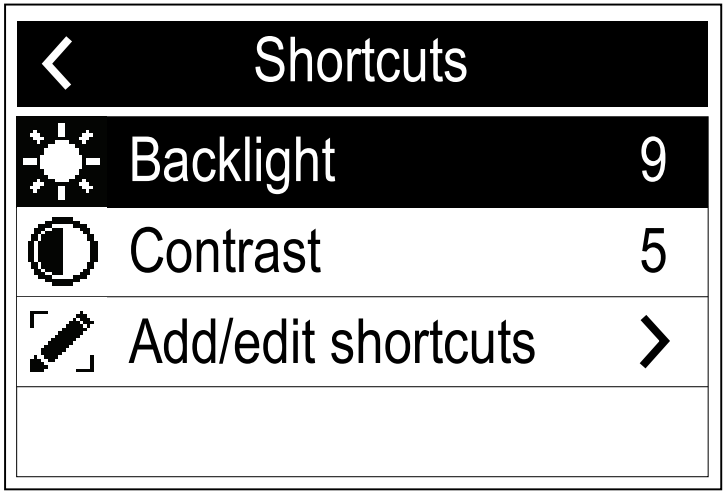

Frequently used functions can be added by selecting *[Add/edit shortcuts.]*

Adjusting Brightness and Contrast

The LCD Brightness (Backlight) and Contrast can be adjusted using the Shortcuts list.

From any screen:

1. Press the *[Power]* button.
2. Select *[Backlight]* or *[Contrast]*.
3. Adjust the Backlight or Contrast to the desired level using:
   i. *[Channel Up]* / *[Channel Down]* buttons on a connected Handset.
   ii. *[Rotary knob]* on the Base station.
4. Press the *[Back]* button to return to the previous screen.

The Backlight and Contrast settings can also be accessed from the Display set-up menu: *[Menu > Set-up > Display set-up]*.

15.9 Shared Brightness

Shared brightness enables simultaneous brightness adjustment of all products that are part of the same group. For example, these groups could be used to reflect the physical location of products on your vessel (e.g.: helm and flybridge).

The following products are compatible with shared brightness:

- Alpha-Series Performance Displays
- LightHouse 4 MFDs.
- LightHouse 3 MFDs using software v3.4.102 or later.
- SeaTalk NG Instrument displays and Pilot controllers.
- SeaTalk NG VHF DSC Radios.
- RMK-9 and RMK-10 remote keypads.

Any adjustments to the shared brightness level will be applied to all products assigned to the same group.

LightHouse 4 / LightHouse 3	Alpha-Series Performance Displays
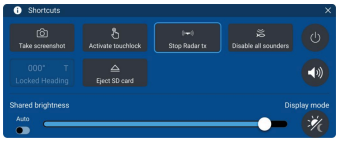	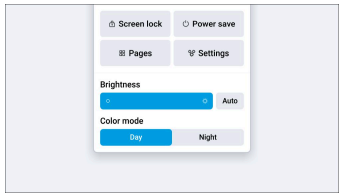

VHF DSC Radio	Instrument display / Pilot controller
	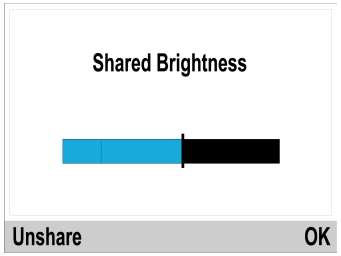

Multiple brightness groups can be configured. For example, these groups could be used to reflect the physical location of products on your vessel e.g.: helm and flybridge.

Shared brightness requires:

- All products to be compatible with the shared brightness function (see list of compatible products above).
- The *[Shared brightness]* setting set to *On* for all products in the brightness group.
- Products to be assigned to network groups.
- All the products in each group to be synchronized.

Note:
If any display in the system has automatic brightness enabled, the brightness of all displays in the same group will be automatically adjusted and synchronized, whenever a brightness adjustment is made on any of the displays in the group.

Enabling Shared Brightness

From the *[Display Set-up]* menu: (*[Menu > Set-up > Display Set-up]*).

1. Select *[Shared Brightness]*.
2. Select *[Shared Brightness]* again to enable Shared Brightness.

   If Shared Brightness is already enabled then selecting this menu item will disable Shared Brightness.
3. Select *[Group]*.
4. Select the group that you want to assign the radio to.

Adjusting the Brightness setting will now change the brightness of all products assigned to that group.

15.10 Initial startup

Unless your radio has been pre-programmed; the first time you power-up your radio you will be requested to select certain options. With the exception of your MMSI and ATIS ID, you will also be requested to enter these options after a factory reset.

After acknowledging the startup screen, unless previously set you will be prompted to make the following selections:

1. *[Language selection]* — For a list of available languages, please refer to: **p.89 — Selecting a language**
2. *[Turn on AIS reception]* **(Ray70 / Ray73 / Ray91 only)** — Enables the built-in AIS receiver. This step is only applicable to radios with a built-in AIS receiver. For more information, please refer to: **p.89 — Switching on the AIS receiver**
3. *[Select network type]* — Selects which connection to transmit AIS and DSC information on, to connected equipment. This step is only applicable if the AIS receiver was turned on in the previous step. For information on the options available, please refer to: **p.89 — Selecting a network type**
4. *[Enter MMSI number]* — Required to enable DSC functions. This option is not required after a factory reset, or if the radio has been pre-programed in MARCOM-C mode, or has ATIS enabled. If not already selected, you will also be prompted to select your network type. For more information, please refer to: **p.90 — Entering an MMSI number**
5. *[Enter ATIS ID]* — Required when the radio will be used in the inland waterways of Europe. This step is only applicable if the radio has been pre-programed in MARCOM-C mode. For more information, please refer to: **p.91 — Entering an ATIS ID**
6. *[Frequency band selection]* — Sets the relevant channels for your region. This step is not applicable if the radio has been pre-programed in MARCOM-C mode. For more information, please refer to: **p.92 — Changing the radio region**

15.11 Accessing the menu

The radio's various options and settings are contained within the menu.

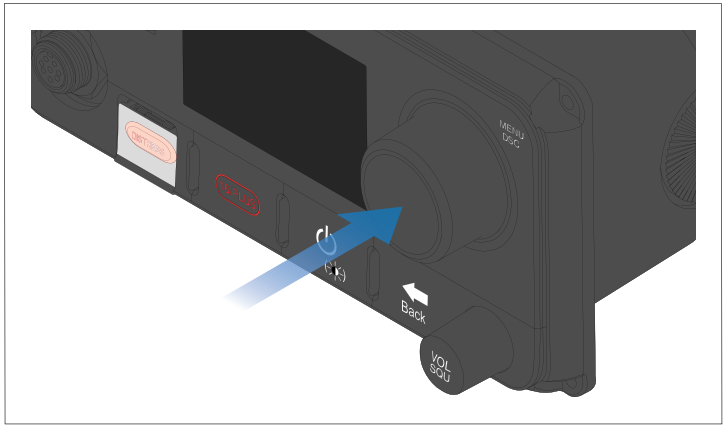

From the Homescreen:

1. Press the *[OK]* push button on the *[Rotary knob]*.

15.12 Selecting a language

The language the radio uses can be changed.

From the Main menu:

1. Select *[Set-up]*.
2. Select *[Language]*.

   The following languages available are:

   - *[English] (default) — English*
   - *[Español] — Spanish*
   - *[Français] — French*
   - *[Deutsch] — German*
   - *[Italiano] — Italian*

3. Select the language that you want the radio to be set to.

The User interface language is changed to the selected language.

15.13 Switching on the AIS receiver

If your radio includes a built-in AIS receiver then it can be enabled and disabled as follows:

From the Main menu:

1. Select *[Set-up]*.
2. Select *[AIS]*.
3. Select *[On]* to switch the receiver on, or select *[Off]* to switch the receiver off.

15.14 Selecting a network type

When connecting your radio to other devices it is important to ensure you select the network connection and type that you want data to be transmitted over.

From the Main menu:

1. Select *[Set-up]*.
2. Select *[Network output]*.

   The following network types are available:

   - *[NMEA 2000] (default)*
   - *[0183 High speed]*
   - *[0183 Std speed]*

3. Select the network type relevant to the devices connected to your radio. If your radio is not connected to any other devices any option can be selected.

   Selecting [0183 Std speed] will disable the built-in AIS receiver, where applicable.

The *[Network output]* setting determines the baud rate of the NMEA 0183 input:

Network output setting	NMEA 0183 input baud rate
NMEA 2000	Standard speed (4,800)
NMEA 0183 High Speed	High speed (38,400)
NMEA 0183 Standard Speed	Standard speed (4,800)

15.15 Entering your MMSI number

To program your radio with your MMSI number follow the steps below.

Note:

• In some regions (such as the USA), the MMSI and Static Data must be entered **only** by an authorized Raymarine dealer or other appropriately-qualified marine communications equipment installer.

• The MMSI number can only be entered when the radio is configured to use the **EUR** (Europe) channel set.

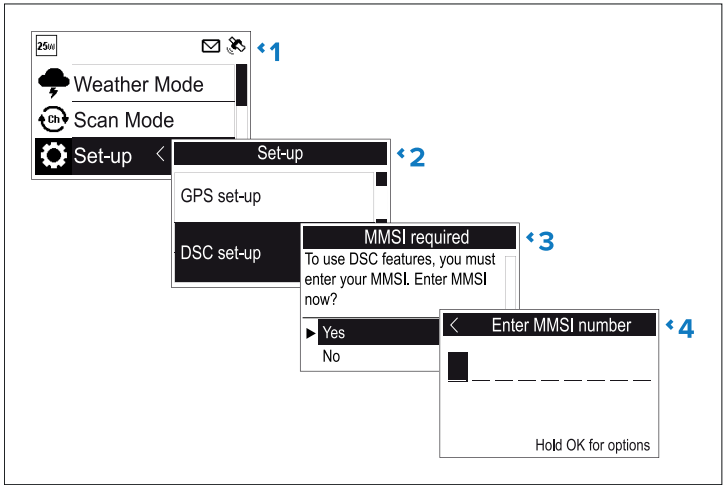

From the Set-up menu: (*[Menu > Set-up]*)

1. Select *[DSC set-up]*.
2. Select *[MMSI]*.

   *The **MMSI required** message will be displayed if no MMSI number has been set.*
3. Select *[Yes]*.
4. Use the *[Rotary knob]* or the *[Channel Up]* and *[Channel Down]* buttons on a Raymic handset to cycle through the available numbers and press *[OK]* to confirm each number and move to the next digit.

Important:
You should only enter the unique 9 digit MMSI number provided by your licensing authority.

MMSI numbers starting with a '0' are only used for groups and coast stations. If you enter a '0' as the first digit the radio will assume you are entering a coast station MMSI and automatically assign a '0' as the second digit; this is to ensure a group MMSI is not entered as the radio's unique MMSI.

5. Press the *[Back]* button at any time to edit digits you have already entered.
6. Press and hold the *[OK]* button to display options to *[Move cursor]* back and forward through the digits.
7. When the final digit is confirmed select *[DONE]*.

Example

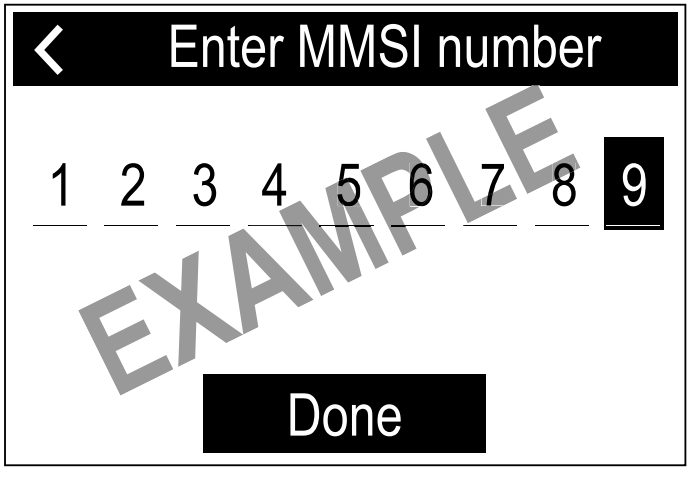

8. The MMSI is displayed onscreen, check that it is correct, then:
   i. Select *[Yes – Save]*, or
   ii. if the number entered is not correct select *[No – Retry]*.

Caution: MMSI and ATIS ID entry

- You can only enter the MMSI number and ATIS ID once!
- If you store an incorrect MMSI number or ATIS ID in your product, it will have to be reset by an authorized dealer.
- In some regions (such as the USA), the MMSI and Static Data must be entered **only** by an authorized Raymarine dealer or other appropriately-qualified marine communications equipment installer.
- The MMSI number and ATIS ID can only be entered when the radio is configured to use the **EUR** (Europe) channel set.

15.16 Entering your ATIS ID

A unique ATIS ID must be entered before ATIS mode can be enabled.

The ATIS ID can only be entered when the **EUR** (Europe) channel set is selected.

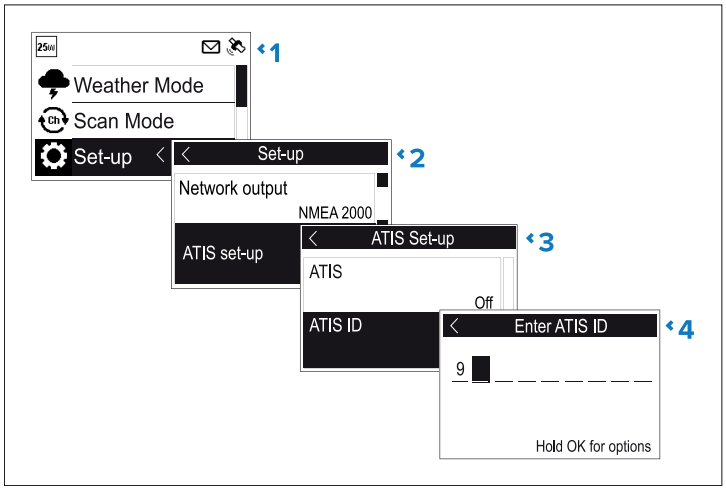

From the Main menu.

1. Select *[Set-up]*.
2. Select *[ATIS set-up]*.
3. Select *[ATIS ID]*.

   Not set *will be displayed if no ATIS ID has been set.*

   The first digit is set to a '9' and cannot be changed, this is because all ATIS IDs start with a '9'.

   As most ATIS IDs consist of a '9' followed by your 9 digit MMSI number; if your radio already has an MMSI number the ATIS ID will be pre-filled in this format.
4. If the ATIS ID has been pre-filled, check it carefully against your issued ATIS ID.
5. To enter your ATIS ID manually, use the *[Rotary knob]* or the *[Channel Up]* and *[Channel Down]* buttons on a Raymic handset to cycle through the available numbers and press *[OK]* to confirm each number and move to the next digit.

   You should only enter the unique 10 digit ATIS ID provided by your licensing authority.
6. Press the *[Back]* button at any time to edit digits you have already entered.
7. Press and hold the *[OK]* button to display options to *[Move cursor]* back and forward through the digits.
8. When the final digit is confirmed select *[DONE]*.

Example

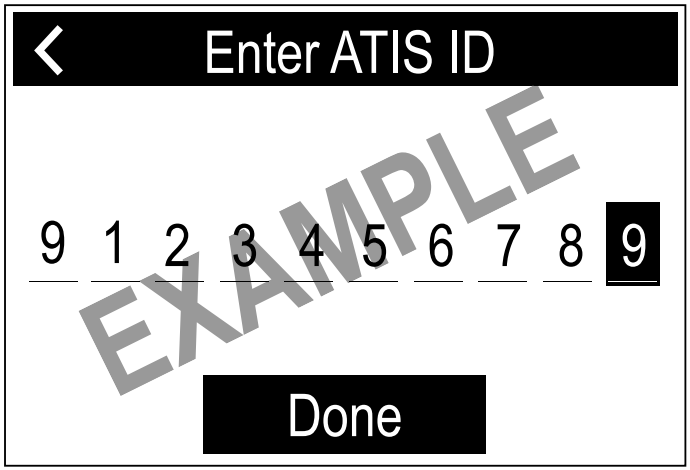

9. The ATIS ID is displayed onscreen, check that it is correct, then:
   i. Select *[Yes – Save]*, or
   ii. if the number entered is not correct select *[No – Retry]*.

> **Caution: MMSI and ATIS ID entry**
>
> • You can only enter the MMSI number and ATIS ID once!
>
> • If you store an incorrect MMSI number or ATIS ID in your product, it will have to be reset by an authorized dealer.
>
> • In some regions (such as the USA), the MMSI and Static Data must be entered **only** by an authorized Raymarine dealer or other appropriately-qualified marine communications equipment installer.
>
> • The MMSI number and ATIS ID can only be entered when the radio is configured to use the **EUR** (Europe) channel set.

Enabling and disabling ATIS mode

ATIS (Automatic Transmitter Identification System) is a marine VHF radio system used for identifying vessels on some European inland waterways. A unique ATIS ID must be entered before ATIS mode can be enabled.

> **Note:**
>
> • ATIS is only available when the **EUR** (Europe) channel set is selected.
>
> • A unique ATIS ID must be entered before ATIS mode can be enabled; refer to: **Entering your ATIS ID**

With ATIS mode enabled, the radio's region will be fixed to the EUR (Europe) channel set, and the following functions are disabled:

- DSC functions
- Watch Mode
- Scan Mode
- High / low power is restricted on certain channels

From the Main menu.

1. Select *[Set-up]*.
2. Select *[ATIS set-up]*.
3. Select *[ATIS]*.

   If no ATIS ID has been set, you will be requested to enter one before ATIS mode is enabled.
4. If an ATIS ID has already been set, select *[On]* to enable ATIS mode, or *[Off]* to disable ATIS mode.

15.17 Changing the radio region

Prior to using the radio you must set the Frequency band to the region your radio will be used in.

From the Main menu:

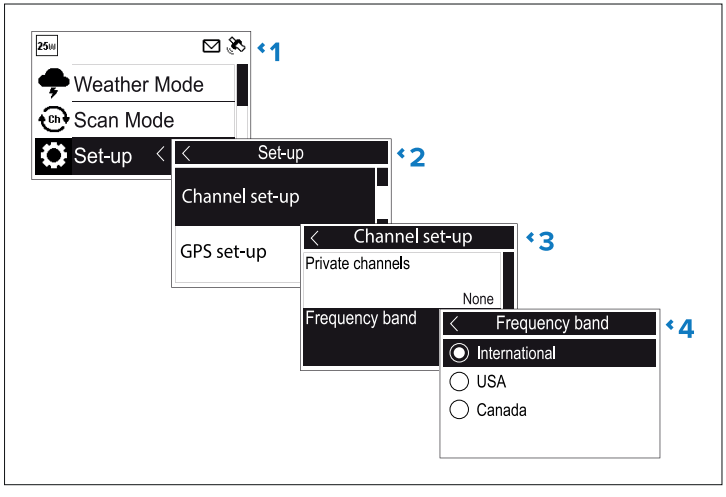

1. Select *[Set-up]*.
2. Select *[Channel set-up]*.
3. Select *[Frequency band]*.
4. Select the relevant region from the list.

   The available options are:

   - *[International]*
   - *[USA]*

- *[Canada]*

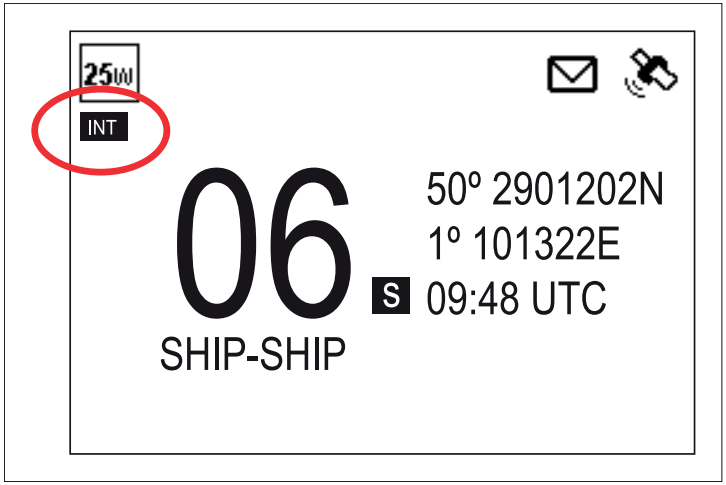

An icon is displayed on the Homescreen that identifies which region has been set.

15.18 Switching between high and low transmit power

You can switch transmit power using the HI/LO button on the Handset / Fistmic.

The transmit power can also be changed from the *[Set-up]* menu: *[Menu > Set-up]*

1. Select *[Power output]*.

   Selecting the Power output option will switch between High (25 watt) and Low (1 watt) power output.

15.19 GNSS (GPS) set up

If your radio has a GNSS (GPS) position fix then the following information can be displayed:

- latitude
- longitude
- UTC time
- COG and SOG

When position data is available the satellite icon is displayed onscreen.

If no position data is available then the latitude, longitude and time can be entered manually so that it can be included in DSC distress transmissions.

Position data received from other vessels can be displayed on a connected Raymarine® multifunction display.

Enabling and disabling the internal GNSS (GPS)

From the *[GPS set-up]* menu: *[Menu > Set-up > GPS set-up]*

1. Select *[Integrated GPS]*.

   Selecting *[Integrated GPS]* will switch the radio's internal GNSS receiver *On* and *Off*.

Switching between internal and external antenna

Your radio's built-in GNSS (GPS) receiver includes an internal antenna. You can also use an external antenna instead, which will provide improved performance. You must specify whether you are using an internal or external antenna.

From the *[GPS set-up]* menu: *[Menu > Set-up > GPS set-up]*.

1. Select *[GPS antenna]*.

   Selecting *[GPS antenna]* will switch between the internal antenna and external antenna option.

Manual GPS source missing or no position data

If the manual GPS source is missing, no position data is available or position data becomes unavailable; after 10 minutes an audible warning is sounded, the GNSS (GPS) icon flashes and the **Manual GPS source missing** / **No position data** message is displayed.

Once the warning has been acknowledged the GNSS (GPS) icon will continue to flash. The **Manual GPS source missing** / **No position data** warning is repeated every 4 hours if position data is still unavailable, has not been entered manually or has been entered manually but over 23.5 hours ago.

If position data has been entered manually the display alternates between displaying the manual position and time and the **Manual Position** message. if the manually entered position has not been

updated in the last 4 hours the GNSS (GPS) icon flashes and an audible warning is sounded. This warning will be repeated every 4 hours until position is manually updated or position data becomes available.

Where no position data is available or has not been manually updated for 23.5 hours then position data will change to ‘9’s and time will change to ‘8’s.

Entering position manually

If GPS position data is not available it can be entered manually.

From the *[GPS set-up]* menu: *[Menu > Set-up > GPS set-up]*.

1. Select *[Set manual position]*.

   The Manual position screen requires you to input latitude, longitude and UTC time.
2. Use the *[Rotary knob]* or the *[Channel Up]* and *[Channel Down]* buttons on a Raymic handset to cycle through the available numbers and press *[OK]* to confirm each number and move to the next digit.
3. When the relevant information has been entered select *[OK]* to confirm the details.

Selecting (GNSS) GPS information to display

You can change the GNSS (GPS) data that is displayed on the Homescreen.

From the *[GPS set-up]* menu: *[Menu > Set-up > GPS set-up]*.

1. Select *[Homescreen display]*.

   Selecting Homescreen display will switch between *[Location & time]* and *[Location & COG/SOG]*.

The *[Homescreen display]* option is also available from the *[Display set-up]* menu: *[Set-up > Display set-up > Homescreen display]*.

Setting time format and offset

You can change the Format and Offset that is applied to the time displayed onscreen.

From the *[Units]* menu: *[Menu > Set-up > Units]*.

1. Select *[Time format]*.

   Selecting Time format will switch between *[12 hour]* and *[24 hour]* format.
2. Select *[Time offset]*.
3. Adjust the offset to the desired value using the *[Rotary knob]* or the *[Channel Up]* and *[Channel Down]* buttons on a Raymic handset.
4. Select *[OK]* to confirm the selection.

15.20 Station priority (Ray63 and Ray73 only)

The Ray63 and Ray73 can have a Local Fistmic, connected to the front connector, and a Raymic (remote) handset, connected to the rear connector.

The following rules apply to station priority:

- The Local station always takes priority over the Remote station.
- Unless a Distress call is in progress, any button press on the Local station will take control from the Remote station.
- If the Remote station is inactive for 3 seconds, the Local station can take control and complete an incomplete Distress call.
- The Local station can interrupt the Remote stations’s voice broadcasts by pressing the *[PTT]* button.
- The Local station will retain control for 3 seconds after the last button press.
- The information on the station which has control is repeated on the other station’s display.

CHAPTER 16: WIRELESS HANDSET STATIONS

CHAPTER CONTENTS

- 16.1 Wireless handsets — page 96
- 16.2 Connecting a wireless handset to the hub — page 96
- 16.3 Connecting the wireless speaker to the Wireless handset — page 98
- 16.4 Wireless set-up menu options — page 99

16.1 Wireless handsets

Wireless handsets are compatible with the Ray63 and Ray73 VHF DSC radios. Using the optional wireless accessories you can create up to 2 fully functional wireless handset stations.

As a minimum the Wireless hub (A80540), Wireless hub adaptor cable (R70739) and Wireless handset (A80544) are required to create a wireless handset station. Additionally a Wireless speaker (A80543) can be connected to each Wireless handset.

After connecting your Wireless hub to the Second station connector on the rear of your Ray63 / Ray73 Base station, the process for setting up a wireless handset station should be:

1. Fully charge the Wireless handset.
2. Connect the Wireless handset to the Wireless hub.
3. If required, connect a Wireless speaker to the Wireless handset.

Warning: Retain a wired handset station

A wired handset station should always be connected and available.

Wireless handset charging

When inserted into the wireless handset charging holster, the wireless handset will be charged using inductive charging.

Attention

Ensure your wireless handset is fully charged before use.

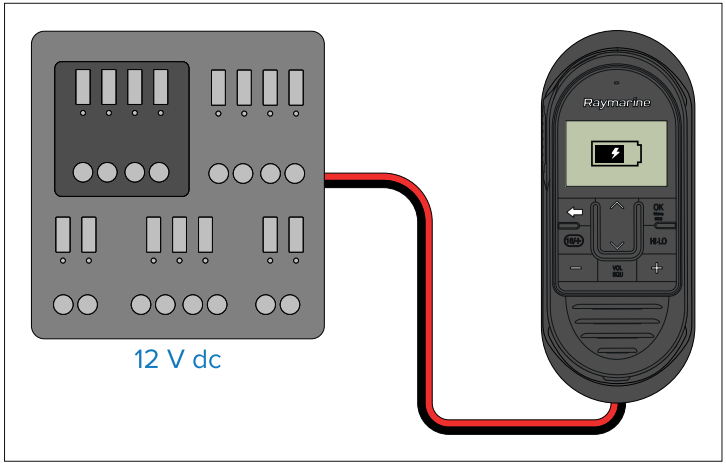

Symbol	Description
	Charging Whilst charging, the battery symbol will gradually visibly “fill up”, indicating its charging completion.
	Charged Once fully charged, the “full” battery symbol visibly reflects the full charge status.

With the Handset powered on, the battery symbol will be displayed in the status bar at the top of the screen.

With the handset powered off, the battery symbol is displayed full-screen.

16.2 Connecting a wireless handset to the hub

Wireless handsets must be connected to the radio via a Wireless hub.

When the Wireless handset is powered on for the first time you will need to connect it to a Wireless hub.

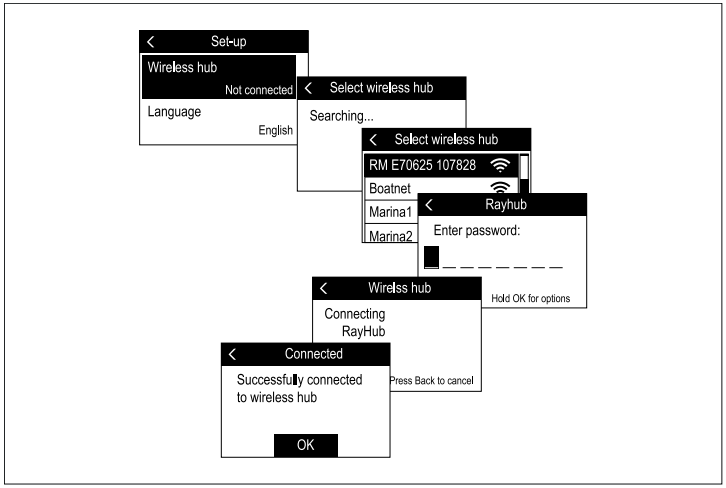

1. Select *[Wireless hub]*.

   The handset will display a list of wireless devices in range.
2. Select your Wireless hub from the list.

   The Wireless hub's default name is 'RM' followed by the 6 digit part number and 7 digit serial number of the radio that the Wireless hub is connected to (e.g.: Radio part number: E70625 and serial number: 1070828 = Hub name: RM E70625 107828).
3. Enter the password.

   You can check the Wireless hub's password using a Wired handset by selecting:[Menu > Set-up > Wireless set-up > Wireless hub set-up > Password].

   The handset will now connect to the Wireless hub.
4. Select *[OK]*.

Checking the Wireless hub's password

You can check the Wireless hub's password at anytime using a Wired handset.

1. Select *[Menu]*.
2. Select *[Set-up]*.
3. Select *[Wireless set-up]*.
4. Select *[Wireless hub set-up]*.
5. Select *[Password]*.

The current password is displayed.

Changing your wireless hub's password

If desired you can change the Wireless hub's default password using a Wired handset.

1. Select *[Wireless hub set-up]* from the *[Wireless set-up]* menu: (*[Menu > Set-up > Wireless set-up > Wireless hub set-up]*).
2. Select *[Password]*.
3. Use the *[Channel Up]*, *[Channel Down]* and *[OK]* buttons to change the default password.

   The password can use up to 8 characters. For the most secure password use a variety of upper and lower case letters, numbers and symbols.
4. When finished, select *[OK]* to confirm.
5. Re-connect your Wireless handset to the hub following the procedure: **p.96 — Connecting a wireless handset to the hub**

Note:

- While the password change is being applied the *[Wireless set-up]* menu will be unavailable.
- Ensure you make a note of your Hub's new password.

Changing the hub's wireless channel

If you experience interference with your wireless handset station, you can change the wireless channel used by the hub to a channel that is less congested with wireless signals.

You must use a Wired handset to change the Hub's wireless credentials.

1. Select *[Wireless hub set-up]* from the *[Wireless set-up]* menu: (*[Menu > Set-up > Wireless set-up > Wireless hub set-up]*).
2. Select *[Wi-Fi channel]*.
3. Select a wireless channel.

   Channels 1 to 13 are available; use a wireless network analyzer to find the least-congested channel. The preferred wireless channels are 1, 6 and 11, as these overlap with the fewest other wireless channels. However, if these channels are congested then try others.

Note:

• While the channel change is being applied the *[Wireless set-up]* menu will be unavailable.

• Your Wireless handset will automatically reconnect to the hub using the new channel.

Changing the Wireless hub's name

You can change the name or SSID of your Wireless hub at anytime.

You must use a Wired handset to change the Hub's wireless credentials.

1. Select *[Wireless hub set-up]* from the *[Wireless set-up]* menu: (*[Menu > Set-up > Wireless set-up > Wireless hub set-up]*).
2. Select *[Hub Name]*.
3. Use the *[Channel Up]*, *[Channel Down]* and *[OK]* buttons to change the default name.

   The maximum name length is 10 characters.
4. When finished, select *[OK]* to confirm.

Note:

• While the name change is being applied the *[Wireless set-up]* menu will be unavailable.

• Your Wireless handset will automatically reconnect to the hub using the new name.

16.3 Connecting the wireless speaker to the Wireless handset

You can connect a Wireless speaker to your Wireless handset.

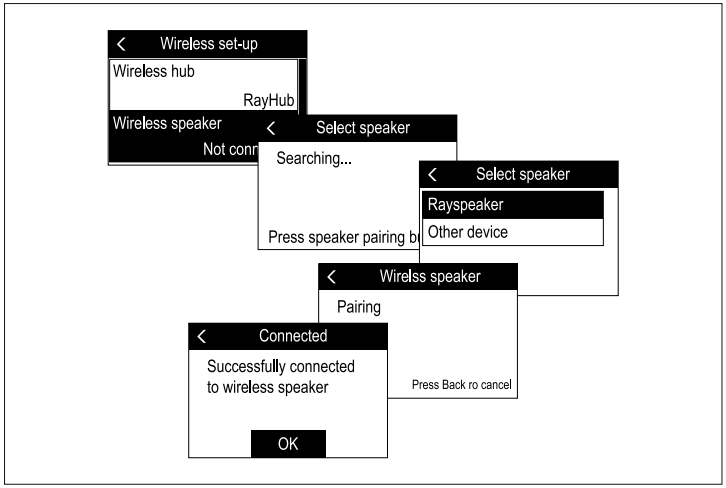

1. Power on the Wireless speaker.
2. Press the *[Pairing]* button on the front of your Wireless speaker to pair with a Wireless handset for the first time.
3. Using the Wireless handset, select *[Wireless speaker]* from the *[Wireless set-up]* menu: *[Menu > Maintenance > Wireless set-up]*

   The handset will search for available devices.
4. Select your Wireless speaker from the list.

   The Wireless handset will now pair with the Wireless speaker.
5. Select *[OK]*.

The Wireless handset's audio will now be heard through the Wireless speaker.

Note:

• You can only output audio to 1 speaker from the same handset.

• If the pairing is unsuccessful, power the wireless speaker off and then back on again and repeat the process.

Disconnecting a Wireless speaker

To disconnect your Wireless speaker from the Wireless handset follow the steps below:

With the speaker connected to the handset:

1. Press the *[Pairing]* button on the front of the speaker.
2. Once disconnected the speaker can be connected to any Wireless handset by following the procedure found within the following section:
   p.98 — Connecting the wireless speaker to the Wireless handset

16.4 Wireless set-up menu options

The Wireless set-up menu is available when a Wireless hub is connected.

Menu item	Description	Option
[Wireless hub]	Enables you to search for and connect to a Wireless hub.	List of available networks.
[Wireless hub set-up]	Provides access to the Wireless hub's settings. **Note:** The Wireless hub set-up menu can only be accessed using a Wired handset.	• *[Wireless hub name]* • *[Password]* • *[Wi-Fi channel]*
[Wireless speaker]	Enables you to search for and connect to a Wireless speaker.	Search for devices.

Wireless hub set-up menu options

Note:
The Wireless hub set-up menu can only be accessed using a Wired handset.

Menu item	Description	Options
[Hub name]	The Wireless hub's default name is 'RM' followed by the 6 digit part number and 7 digit serial number of the radio that the Wireless hub is connected to (e.g.: Radio part number: E70625 and serial number: 1070828 = Hub name: RM E70625 107828).	Edit hub name
[Password]	You can change the password to any alphanumeric (including standard symbols) password using up to 8 characters.	Change password
[Wi-Fi channel]	Enables you to change the wireless (2.4Ghz) channel used by the Wireless hub.	Channels 1 to 13

Wireless handset not connected menu

When a connection to a Wireless hub is not available or when a connection is cancelled, the following menu options will be displayed on the Handset.

Menu item	Description	Options
[Wireless hub]	Enables you to search for and connect to a Wireless hub.	List of available networks.
[Language]	Enables selection of the user interface language.	• *[English]* — English • *[Español]* — Spanish • *[Français]* — French • *[Deutsch]* — German • *[Italiano]* — Italian
[Backlight]	Provides access to the Backlight level	• *[1 to 9]* • *[Off]*
[Contrast]	Provides access to the Contrast level	• *[1 to 10]*
[Key beep]	Enables adjustment of the audible beep when pressing buttons.	• *[Off]* • *[Quiet]* (default) • *[Loud]*

CHAPTER 17: DIGITAL SELECTIVE CALLING (DSC)

CHAPTER CONTENTS

- 17.1 Digital Selective Calling (DSC) — page 102
- 17.2 Distress calls — page 103
- 17.3 Urgency calls — page 106
- 17.4 Safety calls — page 107
- 17.5 Individual (routine) calls — page 107
- 17.6 Group calls — page 108
- 17.7 Position requests — page 109
- 17.8 Phonebook — page 109
- 17.9 Call logs — page 110
- 17.10 Test calls — page 111
- 17.11 DSC set-up menu options — page 111

17.1 Digital Selective Calling (DSC)

Traditional VHF radio systems require users to listen until someone speaks, and then determine whether the call is for them. DSC ensures that calls are received by alerting or announcing the intended recipient(s) first so they are ready to listen to the subsequent message on the relevant channel.

DSC is part of the Global Maritime Distress and Safety System (GMDSS), a maritime communications system for emergency and distress messages and all types of routine communications such as ship-to-ship or ship-to-shore.

DSC is a digital signalling system, which operates on VHF channel 70. DSC calls include other data such as your vessel's identification number, purpose of the call, your position and the channel you want to speak on.

DSC calls can be divided into 4 categories and are prioritized as shown below:

1. Distress
2. Urgency
3. Safety
4. Routine

Distress

A Distress call should only be used when there is imminent danger to a vehicle or person that requires immediate assistance.
When making a distress call the following information is transmitted to all stations within range:

- Vessel MMSI number.
- Vessel position (must be input manually if no position data is available or the manual GPS source is missing).
- Local time (must be input manually if no position data is available or the manual GPS source is missing).
- Nature of the distress (when designated).
- Transmission frequency.

The call is automatically repeated at approximately 4 minute intervals until it is acknowledged either by a coast radio station (CRS) or a vessel within radio range. Distress calls must be followed by a MAYDAY call on priority channel 16.

Urgency

An urgency call should be used when there is danger to a vehicle or person that does not require immediate assistance.
When making an urgency call the following information is transmitted to all stations within range:

- Vessel MMSI number.
- Vessel position (must be input manually if no position data is available or the manual GPS source is missing).
- Local time (must be input manually if no position data is available or the manual GPS source is missing).
- Transmission frequency.

Once an urgency call is sent it must be followed with a PAN PAN voice message on channel 16 and include the necessary details.

Safety

A safety call should be used when there is an important navigational warning or meteorological forecast/broadcast. Safety alerts can also used for communications during search and rescue operations.
When making a safety call the following information is transmitted to all stations within range:

- Vessel MMSI number.
- Vessel position (must be input manually if no position data is available or the manual GPS source is missing).
- Local time (must be input manually if no position data is available or the manual GPS source is missing).
- Transmission frequency.

Once a safety call is sent it must be followed with a SECURITE voice message on channel 16 and include the necessary details.

Individual (routine)

Routine calls are used for contacting other vessels, marinas, or shore stations.
Routine calls are made on channel 70 using the dedicated Maritime Mobile Service Identity (MMSI) number of the station to be contacted, selecting a VHF working channel and sending the call. Both radios automatically switch to the chosen channel for conversation.

Routine calls can also be made to groups — When groups of ships need the same information (yacht races, club rallies etc.) a special group-call identity can be used to enable restricted broadcast calls.

Note:
To transmit precise position data, the radio must be connected to a GNSS (GPS) receiver. Otherwise, regular manual position updating is required.

17.2 Distress calls

Making a designated distress call

When making a Distress call you can specify the nature of the distress, if GNSS (GPS) data is not available you must also specify your coordinates.

Note:
Your radio must have an MMSI number saved before DSC functions can be used.

From the Distress call menu: *[Menu > DSC Calls > Distress calls]*

1. Select a distress type from the list.
   - If your radio is receiving a valid GNSS (GPS) position then the distress type and coordinates are displayed on-screen, otherwise you will be prompted to enter your position coordinates.
2. If prompted, enter your position coordinates and local time using the *[Rotary knob]* or *[Channel Up]* and *[Channel Down]* buttons on a Raymic handset to enter the relevant details.
3. When complete press the *[OK]* button.
4. Follow the steps for *'Making a Distress Call'* to transmit the distress.

Making a distress call

In an emergency you can use your unit to make an automatic DSC distress call.

With the spring loaded cover open:

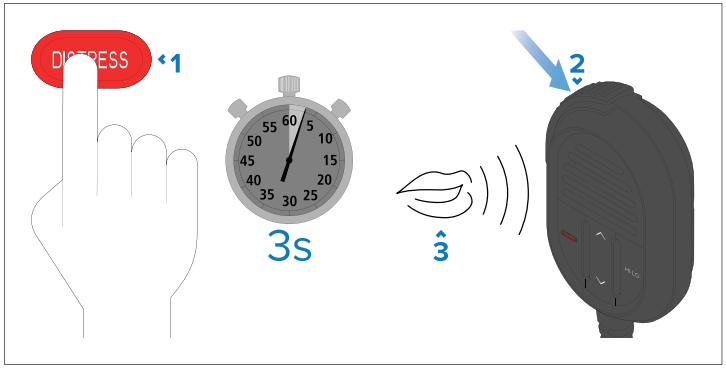

1. Press and hold the *[DISTRESS]* button for 3 seconds.

   Once the [DISTRESS] button is pressed a 3 second count down will begin, when the count down reaches zero the DSC distress call is transmitted.

   The distress call is repeated automatically until it is acknowledged.
2. Press and hold the *[PTT]* button, then slowly and clearly speak the details of the distress in the following format:

   MAYDAY, MAYDAY, MAYDAY

   This is <state name of vessel 3 times>

   MAYDAY <state name of vessel 1 time>

   My position is <state latitude and longitude, or true bearing and distance from a known point.>

   I am <state nature of distress e.g. sinking, on fire etc.>

   I have <state number of persons on board and any other information — drifting, flares fired etc.>

   I REQUIRE IMMEDIATE ASSISTANCE

   OVER
3. Release the *[PTT]* button.

Making a Mayday call

In an emergency you can also make a Mayday call following the instructions below.

1. Press the *[16 PLUS]* button.
2. Press and hold the *[PTT]* button.

3. Slowly and clearly speak the details of the distress:

   MAYDAY, MAYDAY, MAYDAY

   This is — state name of vessel 3 times

   MAYDAY — state name of vessel 1 time

   My position is — state latitude and longitude, or true bearing and distance from a known point

   I am — state nature of distress e.g. sinking, on fire etc.

   I have — state number of persons on board and any other information — drifting, flares fired etc.

   I REQUIRE IMMEDIATE ASSISTANCE

   OVER
4. Release the *[PTT]* button.
5. If an acknowledgement is not received then repeat steps 2 to 4 above.

Cancelling a distress call before transmission

To cancel a distress call before it is transmitted follow the steps below:

1. Release the *[DISTRESS]* button before the countdown timer completes.

   When the button is released you will be returned to normal operation.

Cancelling a distress call after transmission

A distress call can be cancelled after it has been transmitted.

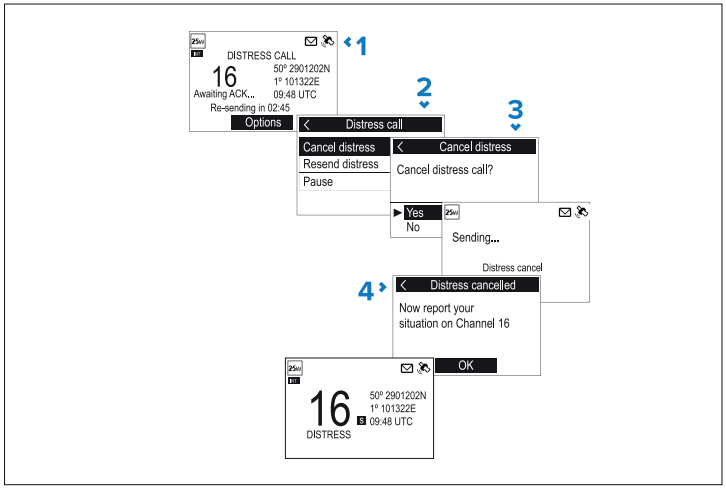

1. Select *[Options]*.
2. Select *[Cancel distress]*.
3. Select *[Yes]* to confirm cancellation.
4. Select *[OK]*.
5. Press and hold the *[PTT]* button and make a broadcast to all stations giving your vessel's name, call sign and MMSI number and cancel the false distress alert

Example: "All, Stations, All Stations, All Stations. This is <NAME>, <CALL SIGN>, <MMSI ID>, <POSITION>. Cancel my distress alert of <DATE>, <TIME>, <NAME>, <CALL SIGN>"

6. Repeat the broadcast described in step 5.

Receiving a distress call

It is expected that only a Coast Radio Station (CRS) will acknowledge DSC distress calls and will act as the coordinator for the rescue operation.

When a distress call is received an alarm is sounded at full volume and the LCD displays information relating to the distress.

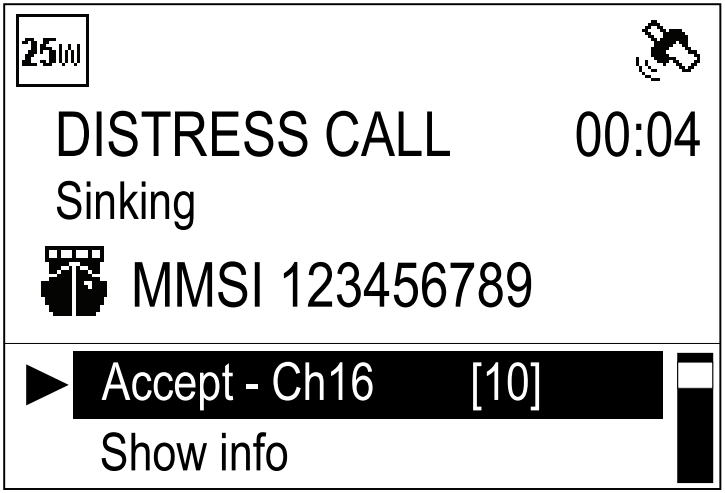

If the *[Auto channel change]* function is enabled; 10 seconds after receipt of a distress call the radio will automatically re-tune to channel 16. Otherwise the user is prompted to change channel manually.

The details of the distress call are recorded in the distress log and the envelope icon will flash to let you know a message has been received. When connected to a **Raymarine**® multifunction display (**MFD**) the position data from the distress call can also be displayed in the Chart application.

When the received distress call is acknowledged by the CRS or by another station the radio will resume normal operation.

Ignoring a distress call

You can ignore a distress call by muting the alarm and cancelling the distress call screen.

If your radio is already tuned to the priority channel then the *[Ignore]* option will not be available.

With an incoming distress call displayed.

1. Select *[Ignore]* from the options displayed.

   Normal operation is resumed.

Acknowledging a distress call

Distress calls must only be acknowledged if the call continues without acknowledgement from a CRS, you are close enough to the distressed vessel to be of assistance and are prepared to relay the distress to a CRS by any means possible. Class D DSC radios are forbidden from automatically acknowledging distress calls. Acknowledgement must only be made by voice message on channel 16.

After receiving a distress call that has gone unanswered:

1. Switch to channel 16 to listen for the distress voice message.
2. Wait for the CRS to acknowledge the call.
3. If the distress call is not acknowledged by another station then acknowledge the call as follows:

   MAYDAY

   (MMSI of the vessel in distress)

   Name of vessel in distress <repeated 3 times>

   Call sign of the vessel in distress

   This is <MMSI of your vessel>, <name of your vessel repeated 3 times> <call sign of your vessel>

   RECEIVED MAYDAY
4. You MUST then notify the shore authorities by any means possible to relay the distress call.

Manually relaying a distress call

A distress relay should only be sent if: the person or vehicle in distress is unable to transmit the distress call itself, for example red flares sighted at night or the person or vehicle in distress is out of range of a CRS and you have already acknowledged the distress by voice message. You can also relay a received distress relay alert manually if it goes unanswered.

1. Switch to channel 16
2. Slowly and clearly speak the details of the distress:

   MAYDAY RELAY, MAYDAY RELAY, MAYDAY RELAY

   This is <MMSI of your vessel, name of your vessel repeated 3 times and your call sign>

   Received the following MAYDAY from <MMSI of vessel in distress, name of vessel in distress, call sign of vessel in distress>

   Message begins

   Message received from vessel in distress or details of the distress

   Message ends

   OVER

Distress relays sent by other stations

When a Coast Station or another vessel, has received, and acknowledged a DSC distress alert it may transmit a distress alert relay to other vessels in the immediate area.

Distress relays sent from other stations can be received by the radio.

The radio cannot re-send a distress relay automatically. If required you can relay a distress relay message manually.

If a distress relay is sent specifically to the radio then it can be acknowledged, otherwise acknowledgement is not required.

Acknowledging a distress relay sent to your vessel

If a distress relay is specifically sent to your vessel this will be because the sender deems you to be in a position to assist in the rescue. The distress relay information is displayed onscreen.

When a distress relay is received:

1. Select *[Show info]* from the options to review the relevant details.
2. If the distress relay was sent individually to you, select *[Accept]* to send a distress relay acknowledgement.
3. Ensure the radio is tuned to channel 16.

Note:
Distress relay calls can only be acknowledged automatically when sent individually to you.

17.3 Urgency calls

Making an urgency call

An urgency call should be used when there is danger to a vehicle or person that does not require immediate assistance. Urgency calls are transmitted to all stations.

From the *[All ships call]* menu: *[Menu > DSC Calls > All ships call]*.

1. Select *[Urgency]*.

2. Select the channel for subsequent communication.

   The call is transmitted. Once the call has been successfully transmitted '**Sent**' is displayed onscreen and the channel is changed to the specified channel.
3. Press the *[OK]* button.
4. Press and hold the *[PTT]* button and speak the following message:

   PAN PAN, PAN PAN, PAN PAN

   ALL STATIONS, ALL STATIONS, ALL STATIONS

   This is — MMSI of your vessel, name of your vessel repeated 3 times, call sign of your vessel.

   Position — Your vessel's position.

   Reason for call — State the reason for the call and include all information which will assist in the rescue.

   OVER

Receiving an urgency call

When an urgency call is received:

1. Select *[Show info]* from the options to review relevant call details.
2. Select *[Accept]* at any time to accept the call.

   If auto channel change is turned on then the channel will automatically change after 10 seconds.

   The radio is re-tuned to the specified channel.
3. Listen for the urgency call message.

17.4 Safety calls

Making a safety call

Safety calls should be used when there is an important navigational warning or meteorological forecast/broadcast. Safety alerts can also be used for communications during search and rescue operations.

From the *[All ships call]* menu: *[Menu > DSC Calls > All ships call]*.

1. Select *[Safety]*.
2. Select the channel for subsequent communication.

   The call is transmitted. Once the call has been successfully transmitted '**Sent**' is displayed onscreen and the channel is changed to the specified channel.
3. Press the *[OK]* button.
4. Press and hold the *[PTT]* button and speak the following message:

   SECURITE, SECURITE, SECURITE

   ALL STATIONS, ALL STATIONS, ALL STATIONS

   This is — MMSI of your vessel, name of your vessel repeated 3 times, call sign of your vessel.

   Position — Your vessel's position.

   Reason for call — state the reason for the safety call.

   OUT

Receiving a safety call

When a safety call is received:

1. Select *[Show info]* from the options to review relevant call details.
2. Select *[Accept]* at any time to accept the call.

   If auto channel change is turned on then the channel will automatically change after 10 seconds.

   The radio is re-tuned to the specified channel.
3. Listen for the safety call message.

17.5 Individual (routine) calls

Individual calls can be made to contacts saved in your Phonebook or to any station by manually entering an MMSI number.

Note:
When calling a coast station there is no need to select a channel for communication.

If a call cannot be accepted then a reason code is displayed.

Code	Reason
No Reason	No reason given
Congestion	Congestion at maritime switching centre
Busy	Station Busy
Queue	Queue indication
Barred	Station barred

Code	Reason
No operator	No operator available
Unavailable	Operator temporarily unavailable
Disable	Equipment disabled
Unable Ch	Unable to use proposed channel
Unable mode	Unable to use proposed mode

Making an Individual call

From the *[Individual Call]* menu: *[Menu > DSC Calls > Individual Call]*.

1. Select *[Phonebook]* to make a routine call to a contact saved in your Phonebook, or
2. Select *[Recent Calls]* to make a routine call to a contact that you have called recently, or
3. Select *[Enter MMSI]* to manually enter the MMSI number of the station you want to contact.
4. Select a contact or enter an MMSI manually and press the *[OK]* button.
5. Select the Channel you want to transmit the call on.

   If the MMSI is a CSR then the radio will automatically tune to the correct Channel. The radio will wait for an acknowledgement to be received.
6. If an acknowledgement is received, press the *[OK]* button.
7. Press and hold the *[PTT]* button and speak your message.
8. Release the *[PTT]* button when you have completed your message.

Receiving an Individual call

With an incoming individual call displayed:

1. Select *[Show info]* from the options to review relevant call details.
2. Select *[Reply on Ch ##]* at any time to accept the call.

   If auto channel change is turned on then the channel will automatically change after 10 seconds.

   The radio is re-tuned to the specified channel.
3. To reject the call, select *[Reject]*.
4. If you rejected the call, select a reason for the rejection from the list.

Confirmation of the acceptance or rejection of the call is displayed. If you have accepted the call then the radio will re-tune to the requested channel.

17.6 Group calls

Group calls can be made to groups of vessels sharing the same Group MMSI numbers.

Group calls are made by selecting a saved group contact from the *[Phonebook]* or by entering the Group MMSI number for the group you want to call.

Making a group call

From the *[Group Call]* menu: *[Menu > DSC Calls > Group Call]*.

1. Select *[Phonebook]* to make a call to a group saved in your Phonebook, or
2. Select *[Recent Calls]* to make a call to a group that you have called recently, or
3. Select *[Enter MMSI]* to manually enter the MMSI number of the group you want to contact.
4. Select a group or enter an MMSI manually and press the *[OK]* button.
5. Select the Channel you want to transmit the call on.

   The radio will wait for an acknowledgement to be received.
6. If an acknowledgement is received, press the *[OK]* button.
7. Press and hold the *[PTT]* button and speak your message.
8. Release the *[PTT]* button when you have completed your message.

Receiving a group call

Note:
To receive a call made to a Group, the Group's MMSI number must be saved in your Phonebook.

With an incoming group call displayed:

1. Select *[Show info]* from the options to review relevant call details.
2. Select *[Reply on Ch ##]* at any time to accept the call.

If auto channel change is turned on then the channel will automatically change after 10 seconds.

The radio is re-tuned to the specified channel.

3. To reject the call, select *[Reject]*.
4. If you rejected the call, select a reason for the rejection from the list.

Confirmation of the acceptance or rejection of the call is displayed. If you have accepted the call then the radio will re-tune to the requested channel.

17.7 Position requests

The radio can request position information from any station capable of responding to the request.

Position requests can be sent to any contact stored in the *[Phonebook]* or by manually inputting the station's MMSI number.

When connected to a Raymarine® multifunction display (MFD) the position data from the request can also be display in the Chart app.

Making a position request

You can request the position of another station.

From the *[Position Request]* menu: *[Menu > DSC Calls > Position Request]*.

1. Select *[Phonebook]* to request the position of a contact saved in your Phonebook, or
2. Select *[Recent Calls]* to request the position of a contact that you have called recently, or
3. Select *[Enter MMSI]* to manually enter the MMSI number of the station that you want to request the position of.
4. Select a contact or enter an MMSI manually and press the *[OK]* button.

   The position request is sent. When a response is received the position of the contact is displayed.

Responding to a position request

With a Position request displayed:

1. Select *[Send position]* to respond with your current location, or
2. Select *[Cancel]* to ignore the request.
3. If the position reply is set to manual then select *[SEND]* to send the position report.
4. Select *[OK]* to resume normal operation.

If the *[Position requests]* setting, found in the *[GPS set-up]* menu is set to *[Auto accept]* then the response is sent automatically.

Setting automatic response to position requests

You can configure your radio to respond to incoming position requests automatically.

From the *[DSC set-up]* menu: *[Menu > Set-up > DSC set-up]*

1. Select *[Position requests]* to switch between *[Manual accept]* (default) and *[Auto accept]*.

17.8 Phonebook

The Phonebook can be used to save up to 100 contacts.

You can add, edit and delete contacts stored in the Phonebook.

Adding a Phonebook entry

You can save contacts in the Phonebook by entering their MMSI and assigning a name to the contact.

From the *[DSC Calls]* menu: *[Menu > DSC Calls]*.

1. Select *[Phonebook]*.
2. Select *[Add new]*.
3. Select the type of contact.
   - *[Vessel]*
   - *[Group]*
   - *[Coast station]*
4. Use the *[Rotary knob]* or the *[Channel Up]* and *[Channel Down]* buttons on a Raymic handset to cycle through the available numbers and press *[OK]* to confirm and move to the next digit.
5. Press the *[OK]* button to confirm the MMSI.
6. Use the *[Rotary knob]* or the *[Channel Up]* and *[Channel Down]* buttons on a Raymic handset to cycle through the available characters and press *[OK]* to confirm and move to the next character.

   The maximum length for contact names is 10 characters.
7. If the Contact name is less than 10 characters, press and hold the *[OK]* button and select *[Save]*.

8. Press the *[Back]* button at any time to edit characters you have already entered.
9. Press and hold the *[OK]* button and select *[Move cursor]* to edit an existing character.
10. When complete press the *[OK]* button to return to the Phonebook.

Editing a Ponebook entry

From the *[DSC Calls]* menu: *[Menu > DSC Calls]*.

1. Select *[Phonebook]*.
2. Select the contact you want to edit.
3. Select *[Edit name]* or *[Edit MMSI]*

   The contact's MMSI or name is displayed.
4. Use the *[Rotary knob]* or the *[Channel Up]* and *[Channel Down]* buttons on a Raymic handset to change a character.
5. Press the *[OK]* button to confirm each character and move to the next.
6. When you have completed your changes press the *[OK]* button again to save the changes.

Deleting a Phonebook entry

From the *[DSC Calls]* menu: *[Menu > DSC Calls]*.

1. Select *[Phonebook]*.
2. Select the contact you want to edit.
3. Select *[Delete]*.
4. Select *[Yes]*.

The contact is deleted.

17.9 Call logs

All DSC calls are logged.

The following call types are recorded in call logs:

- distress
- distress relay
- distress acknowledgements
- sent position requests
- received position requests
- group calls
- all ship calls
- individual (routine) calls

The details below are recorded for each call:

- MMSI number(s) (If a call is relayed up to 3 MMSI numbers can be recorded)
- type of call
- date and time of call
- latitude and longitude (if sent with the call)
- nature of distress (specified distress calls only)

If the call was received from a contact in the Phonebook then the contact name is displayed, otherwise the MMSI number is displayed.

Accessing the call logs

Follow the steps below to access the call logs.

From the *[DSC Calls]* menu: *[Menu > DSC Calls]*.

1. Select *[Call logs]*.
2. Select the log you want to view:
   - *[Unread]*
   - *[Distress calls]*
   - *[Non-distress calls]*
   - *[Outgoing calls]*
   - *[Position log]*
3. Select a call and press the *[OK]* button to view details.
4. Select *[Options]* to view available options.
   - *[Call Back]* — return a received call.
   - *[Resend]* — only available in the outgoing call log.
   - *[Call]* — available in the position log.
   - *[Send position]* — available in the position log.
   - *[Request position]* — available for individual and distress calls.
   - *[Save to Phonebook]* — available for received and outgoing calls to new contacts.
   - *[Send ACK]* — available for unacknowledged individual received calls.
   - *[Delete]* — deletes the log entry.

17.10 Test calls

A Test Call feature is available for the purposes of testing your DSC VHF radio for correct operation.

There are 2 types of test call:

- Test call to the US Coast Guard automated response test call service (MMSI: 003669999). This type of test call will receive an automated response (acknowledgement).
- Test call to another vessel that has a radio that supports the test call feature. Your radio will automatically acknowledge test calls received from other radios.

For radios that do NOT support the test call feature, correct radio operation can be tested by making an Individual call on channel 70 to another DSC VHF radio.

It is recommended that once you've successfully placed a test call you add the test call MMSI to your radio's Phonebook for easy retrieval for future test calls. For information on how to add an MMSI to your radio's Phonebook, refer to the “Adding a Phonebook entry” section.

Note:
Individual calls (that is, NOT a test call) to the US Coast Guard 003669999 MMSI will NOT receive an automated response.

Note:
The US Coast Guard automated response test call service is only available in the United States and its coastal waters.

Making a Test call

From the *[Test call]* menu: *[Menu > DSC Calls > Test call]*.

1. Select *[Phonebook]* to make a test call to a contact saved in your Phonebook, or
2. Select *[Recent Calls]* to make a test call to a contact that you have called recently, or
3. Select *[Enter MMSI]* to manually enter the MMSI number of the station you want to send a test call.
4. Select a contact or enter an MMSI manually and press the *[OK]* button.

   The test call is sent.
5. If you called the US Coast Guard automated response test call MMSI (003669999), wait for an acknowledgement. If you made a test call to another vessel with a test call capable radio, your radio will wait for a response.

   When an acknowledgement is received, an audible alarm is sounded and the message (envelope) icon is displayed.

Receiving a test call

Your radio will automatically acknowledge received Test calls from other stations

When a Test call is received a notification is displayed to alert you that a test call has been received and automatically acknowledged.

17.11 DSC set-up menu options

The DSC set-up menu options can be accessed from the following menus:

- *[Menu > DSC Calls > DSC set-up]*
- *[Menu > Set-up > DSC set-up]*

Menu item	Description	Options
[MMSI]	To enable the DSC functions on your radio you must enter your unique MMSI number.	
[Auto channel change]	When automatic channel change is turned *[on]* the radio will automatically re-tune after 10 seconds to the requested channel when DSC calls are received.	• *[On]* (default) • *[Off]*
[Position requests]	With Position requests set to *[Auto accept]* the radio will automatically send out position details when a position request is received.	• *[Auto accept]* (default) • *[Manual accept]*

CHAPTER 18: VHF OPERATIONS

CHAPTER CONTENTS

- 18.1 Watch modes — page 114
- 18.2 Scan Mode — page 114
- 18.3 Priority channels — page 114
- 18.4 Sensitivity — page 115
- 18.5 Private channels — page 115
- 18.6 Automatic Transmitter Identification System (ATIS) and Marcom-C mode — page 115
- 18.7 AIS receiver — page 116
- 18.8 Set-up menu options — page 116

18.1 Watch modes

Watch mode monitors priority channels and the currently selected channel.

There are 2 types of watch mode; *[Dual watch]* and *[Triple watch]* or *[Tri watch]*.

- **Dual watch** — This mode monitors priority channel 16 and the currently selected channel.
- **Triple watch** — This mode monitors priority channel 16, the second priority channel (*[Channel 09]* (default)) and the currently selected channel. The second priority channel can also be set to a user defined channel.

When the radio detects a transmission, Watch mode is suspended until the transmission ends; watch mode will then recommence.

Setting Watch mode

From the **Watch Mode** menu: *[Menu > Watch Mode]*.

1. Select *[Dual Watch]* or *[Triple Watch]* as required.

   The radio is now in Watch mode.
2. Select *[2nd priority channel]* to select a different second priority channel for Triple watch.
3. During Watch mode, press the *[Back]* button at any time to end the Watch mode and resume normal operation.

18.2 Scan Mode

Scan mode enables automatic searching for channels that are currently broadcasting.

Scan mode will search through available channels and stop when it finds a channel that is currently broadcasting. If the broadcast stops or is lost for more than 5 seconds then the scan will resume.

Channels can be temporarily removed from an active scan, and the direction of scan can also be changed. When the scan reaches the last channel in the band the scan cycle is repeated.

The following scans options are available:

- *[All Channels]* — All channels in the frequency band the radio is set to are scanned in sequence.
- *[All Channels + 16]* — All channels in the frequency band the radio is set to are scanned, after each channel is scanned priority channel 16 is scanned.
- *[Saved Channels]* — Only channels saved to the radio's memory are scanned in sequence.
- *[Saved Channels + 16]* — Only channels saved to the radio's memory are scanned, after each channel is scanned priority channel 16 is scanned.

Note:
If the weather alert function is activated, the weather alert channel is included in the scan.

Setting Scan mode

Scan mode is started from the main menu.

From the *[Scan Mode]* menu: *[Menu > Scan Mode]*.

1. Select the relevant Scan mode.

   The radio is now in Scan mode.
2. Select *[Edit Saved Channels]* to select the channels that will be scanned when performing a Saved channel scan.
3. During Scan mode, press the *[Back]* button at any time to end the Scan mode and resume normal operation.

18.3 Priority channels

Channel 16 is the dedicated priority channel.

The default secondary priority channel is channel 09. The second priority channel can be changed if desired.

Switching between priority channels

1. Press the *[16 / +]* button to switch between priority channels.

Setting a second priority channel

You can select which channel you want to use as the second priority channel.

From the *[Channel set-up]* menu: *[Menu > Set-up > Channel set-up]*.

1. Select *[2nd priority channel]*.
2. Select the channel that you want to assign as the second priority channel.

18.4 Sensitivity

The sensitivity level of the radio can be set to *[Local mode]* or *[Distant mode]*.

[Local mode] decreases the receiver sensitivity in high traffic areas to reduce unwanted reception. When in Local mode the 'Loc' icon is displayed in the status bar.

[Distant mode] sets the receiver sensitivity to full.

Switching sensitivity modes

You can switch between Local and Distant modes at any time.

From the *[Set-up]* menu: *[Menu > Set-up]*.

1. Select *[Sensitivity]*.

   Selecting *[Sensitivity]* will switch between *[Local mode]* and *[Distant mode]* (default).

18.5 Private channels

The radio may be able to receive additional Private channels depending on the country it is used in and whether the appropriate licenses are held.

The following Private channel sets can be selected:

- *[None]*
- *[Belgium]*
- *[Denmark (pleasure)]*
- *[Denmark (fishing)]*
- *[Finland (pleasure)]*
- *[Finland (fishing)]*
- *[Holland (Netherlands)]*
- *[Norway (pleasure)]*
- *[Norway (fishing)]*
- *[Sweden (pleasure)]*
- *[Sweden (fishing)]*
- *[UK]*

Selecting a private channel set

You can select the set of private channels you want to use.

From the *[Channel set-up]* menu: *[Menu > Set-up > Channel set-up]*.

1. Select *[Private channels]*.

   The list of private channel sets is displayed:
2. Select the required private channel set.

18.6 Automatic Transmitter Identification System (ATIS) and Marcom-C mode

ATIS is a European system used on some inland waterways.

VHF radios operating in an ATIS region must be programmed with a unique ATIS number; this can be obtained from the relevant licensing authority. The ATIS number is attached as a digital signal at the end of each transmission and identifies you to the relevant authorities who monitor the system.

When operating in ATIS mode, some of the products features are not available:

- Use of DSC functions is not permitted in ATIS regions.
- Watch modes are not permitted in ATIS regions.
- Channel scanning is not permitted in ATIS regions.
- ATIS regulations restrict the transmit power to 1 watt for the following channels: 6, 8, 10, 11, 12, 13, 14, 71, 72, 74 and 77.

You can enable or disable ATIS using the menus (except on Marcom-C configured units).

Marcom-C mode

Marcom-C mode is a restricted radio configuration for VHF operators with a Marcom-C license. This is applicable to radios operated exclusively in European inland waterways using the ATIS system.
A Marcom-C VHF radio has the ATIS permanently enabled. You will not be able to disable ATIS operation. Marcom-C operation is set by the dealer at point of sale. If you wish to enable or disable Marcom-C mode, you must contact your Raymarine® dealer.
For further information please contact Raymarine® technical support.

Enabling and disabling ATIS mode

ATIS (Automatic Transmitter Identification System) is a marine VHF radio system used for identifying vessels on some European inland waterways. A unique ATIS ID must be entered before ATIS mode can be enabled.

Note:

- ATIS is only available when the **EUR** (Europe) channel set is selected.
- A unique ATIS ID must be entered before ATIS mode can be enabled; refer to: **Entering your ATIS ID**

With ATIS mode enabled, the radio's region will be fixed to the EUR (Europe) channel set, and the following functions are disabled:

- DSC functions
- Watch Mode
- Scan Mode
- High / low power is restricted on certain channels

From the Main menu.

1. Select *[Set-up]*.
2. Select *[ATIS set-up]*.
3. Select *[ATIS]*.
   If no ATIS ID has been set, you will be requested to enter one before ATIS mode is enabled.
4. If an ATIS ID has already been set, select *[On]* to enable ATIS mode, or *[Off]* to disable ATIS mode.

18.7 AIS receiver

Depending on variant, your radio may have a built-in AIS receiver.

With the built-in AIS receiver switched on, AIS information can be sent to a connected Raymarine® MFD using either NMEA 0183 or SeaTalk NG.

Note:
If using the built-in AIS receiver and outputting over NMEA 0183, ensure that the baud rate is set to *[0183 High speed]*. *[Menu > Set-up > Network output]*.

Switching AIS on and off

From the *[Set-up]* menu: *[Menu > Set-up]*.

1. Select *[AIS]*.
   Selecting AIS will switch the internal AIS receiver *[On]* and *[Off]*.

18.8 Set-up menu options

The Set-up menu options can be accessed from the Main menu.

Menu	Description	Options
[Display set-up]	Provides access to the display settings menu.	• *[Backlight]* • *[Shared brightness]* • *[Contrast]* • *[Homescreen display]*
[Language]	Enables selection of the user interface language.	• *[English]* — English • *[Español]* — Spanish • *[Français]* — French • *[Deutsch]* — German • *[Italiano]* — Italian
[Units]	Provides access to units of measure selection settings.	• *[Time format]* • *[Time offset]* • *[Bearing mode]* • *[Speed unit]*
[Power output]	Switches the Power output of the radio.	• *[Distant]* (default) • *[Local]*
[Sensitivity]	Switches the Sensitivity of the radio.	• *[Low]* • *[High]* (default)

Menu	Description	Options
[Noise cancelling (Tx)]	Switches the transmission noise cancellation feature On and Off. **Note:** Menu only available on Ray63 and Ray73.	• *[On]* (default) • *[Off]*
[Wireless set-up]	Provides access to settings which apply to wireless devices. **Note:** Menu only available on Ray63 and Ray73 when a Wireless hub is connected.	• *[Wireless hub set-up]* • *[Wireless hub]* • *[Wireless speaker]*
[Key Beep]	Enables adjustment of the beep which is heard when pressing buttons.	• *[Off]* • *[Quiet]* (default) • *[Loud]*
[Channel set-up]	Provides access to the Channel set-up menu.	• *[Channel name]* • *[2nd priority channel]* • *[Private channels]* • *[Frequency band]*

Menu	Description	Options
[GPS set-up]	Provides access to the GPS set-up menu.	• *[Internal GPS]* • *[Homescreen display]* • *[Bearing mode]* • *[Position requests]* • *[Set manual position]*
[DSC set-up]	Provides access to the DSC set-up menu.	• *[MMSI]* • *[Auto channel change]* • *[Position requests]*
[AIS]	Switches the internal AIS receiver on and off on. **Note:** Menu only available on the Ray73.	• *[Off]* (default) • *[On]*
[Network output]	Enables you to select the network to be used to output and receive data.	• *[NMEA 2000]* • *[0183 High speed]* • *[0183 Std speed]*

Menu	Description	Options
[ATIS set-up]	Enables you to switch ATIS mode on and off and enter your ATIS ID. ATIS is only available when the radio is configured to use the **EUR** (Europe) channel set.	• *[ATIS]* • *[ATIS ID]*
[Maintenance]	Enables you to view system details and functions that may be required during maintenance and troubleshooting.	• *[About this unit]* • *[System reset]* • *[System test]*

Display Set-up menu

The following menu options are available form the Display Set-up menu.

Menu	Description	Options
[Backlight]	Increases and decreases the LCD and button backlight level.	• *[0 to 9]* • *[Off]*
[Shared brightness]	Enables set-up of Shared Brightness.	• *[Shared brightness]* • *[Group]*
[Contrast]	Increases and decreases the LCD Contrast level.	• *[0 to 10]*
[Homescreen display]	Determines the details displayed onscreen.	• *[Location & Time]* • *[Location & COG/SOG]*

Shared Brightness menu

The following menu options are available form the Shared Brightness menu.

Menu	Description	Options
[Shared brightness]	Enables and disables Shared Brightness.	• *[On]* • *[Off]*
[Group]	Enables you to assign the radio to a Shared Brightness group.	• *[Helm 1]* • *[Helm 2]* • *[Cockpit]* • *[Flybridge]* • *[Mast]* • *[Group 1 to Group 5]*

CHAPTER 19: HAILER, FOG HORN, AND INTERCOM

CHAPTER CONTENTS

- 19.1 Hailer Fog Intercom menu — page 120
- 19.2 Loud hailer — page 120
- 19.3 Fog horn — page 120
- 19.4 Intercom — page 121

19.1 Hailer Fog Intercom menu

The menu options available are determined by the accessories connected to your radio.

Menu name	Connected devices
[Hail/Fog/Int]	Loud hailer and second station connected.
[Hailer/Fog]	Loud hailer connected, no second station.
[Intercom]	Second station connected, no loud hailer.

Note:
For simplicity the procedures in this section all refer to the *[Hail/Fog/Int]* menu.

19.2 Loud hailer

The Ray70, Ray73, Ray90 and Ray91 VHF Radios can be connected to a Loud hailer.

In hailer mode anything spoken into the handset is amplified and broadcast from the hailer. The message is not transmitted over VHF/DSC.

When the hailer is active VHF calls cannot be sent or received.

Using the hailer

From the *[Hail/Fog/Int]* menu: *[Menu > Hail/Fog/Int]*.

1. Select *[Hailer]*.

   Hailer mode is now active
2. Press and hold the *[PTT]* button.
3. Speak your message.
4. Release the *[PTT]* button.
5. Press the *[Back]* button to exit Hailer mode.
6. The hailer listening volume can be adjusted at any time in Listening mode using the *[Volume Control]*.
7. The hailer talking volume can be adjusted at any time, with the *[PTT]* button pressed using the *[Volume Control]*.

Important:
To avoid audio feedback, ensure that the loud hailer is at least 3 m (9.8 ft) away from the VHF base unit and any handset or fistmic at all times. When talking, ensure that the handset or fistmic is pointing in the opposite direction to the loud hailer.

19.3 Fog horn

The fog horn function requires an optional loud hailer to be connected. Please check your product description to ensure a loud hailer can be connected.

The fog horn function can be set to manual or to predefined automatic modes.

In manual mode a continuous tone is sounded for as long as the *[PTT]* button is pressed.

In automatic mode the selected tone will repeat every 2 minutes until interrupted or cancelled. In automatic mode the radio can be used as normal between the fog horn patterns.

Fog mode	Description	Pattern
[Underway]	Vessel underway.	1 long tone.
[Under-way/Stopped]	Vessel not underway.	2 long tones.
[Sailing/Fishing]	sailing vessel or any vessel fishing but not trolling.	1 long tone and 2 short tones.
[Restrict/Tow]	Restricted in ability to maneuver or towing another vessel.	1 long tone and 2 short tones.
[Under tow]	This vessel is being towed.	1 long tone and 3 short tones.
[Pilot vessel]	This vessel is a pilot vessel.	4 short tones.

Fog mode	Description	Pattern
[At anchor]	Vessel is at anchor.	12 consecutive rings.
[Aground]	Vessel is aground.	3 short rings, 12 consecutive rings, 3 short rings.

Using the fog horn in manual mode

From the *[Hail/Fog/Int]* menu: *[Menu > Hail/Fog/Int]*.

1. Select *[Fog horn]*.
2. Select *[Manual mode]*.
3. Press and hold the *[PTT]* button to sound a continuous fog horn tone.
4. Press the *[Back]* button to exit Fog horn mode.

Using automatic fog horn modes

From the *[Hail/Fog/Int]* menu: *[Menu > Hail/Fog/Int]*.

1. Select *[Fog horn]*.
2. Select *[Automatic mode]*.
3. Select an automatic pattern.

   The selected pattern will play and repeat until interrupted.
4. Select *[Stop fog horn]* to exit the automatic fog horn mode, or
5. Select *[Change pattern]* to select a different fog horn pattern.
6. To continue using the radio whilst in automatic fog horn mode select *[Back]* 4 times to return to the Homescreen.

   You can now continue to use the radio as normal. The fog horn pattern will continue to repeat every 2 minutes. If you are making a call when it is due to sound the fog horn will be suspended until you finish your call.

Switching off Fog Horn mode

Automatic Fog Horn mode will remain active until switched off.

From the *[Hail/Fog/Int]* menu: *[Menu > Hail/Fog/Int]*.

1. Select *[Fog horn]*.
2. Select *[Stop fog horn]* to switch off the automatic fog horn mode.

19.4 Intercom

The Intercom function is available when more than 1 station is connected to your radio.

The intercom function allows voice communication between handset stations. Calls can be initiated from either station.

Using the intercom

From the *[Hail/Fog/Int]* menu: *[Menu > Hail/Fog/Int]*.

1. Select *[Intercom]*.
2. (1)Select the handset you want to call.

   The selected handset will ring.
3. Wait for the handset station to acknowledge the call.
4. Press and hold the *[PTT]* button and speak your message.

Note:
(1)Step not required when only 2 handsets are connected.

Responding to the intercom

1. Press the *[PTT]* button and acknowledge the call and to respond to subsequent voice messages.

CHAPTER 20: MAINTENANCE

CHAPTER CONTENTS

- 20.1 Maintenance — page 123

20.1 Maintenance

This product has no user serviceable parts or adjustments. Never remove the cover or attempt to service the product, doing so may invalidate your product warranty.

To following preventive measures should be followed:

- Although the product is waterproof, keep the unit as dry as possible.
- If you remove a connection ensure a dust cap is fitted to the connector.

Routine checks

The following periodic checks should be made:

- Examine cables for signs of damage, such as chafing, cuts or nicks.
- Check that the cable connectors are firmly attached and that their locking mechanisms are properly engaged.

Note:
Cable checks should be carried out with the power supply switched off.

Caution: Product cleaning

When cleaning products:

- Switch off power supply.
- Use a clean damp cloth to wipe clean.
- Do NOT use: abrasive, acidic, ammonia, solvent or other chemical-based cleaning products.
- Do NOT use a jet wash.

Unit cleaning instructions

The unit does not require regular cleaning. However, if you find it necessary to clean the unit, please follow the steps below:

1. Ensure power is switched off.
2. Wipe unit clean with a damp cloth.
3. If necessary, use a mild detergent solution to remove grease marks.

CHAPTER 21: TROUBLESHOOTING

CHAPTER CONTENTS

- 21.1 Troubleshooting — page 125
- 21.2 Power up troubleshooting — page 126
- 21.3 Audio troubleshooting (transmission / reception) — page 127
- 21.4 GNSS (GPS) troubleshooting — page 129
- 21.5 DSC troubleshooting — page 130
- 21.6 AIS troubleshooting (Ray70 / 73 / 91 only) — page 131
- 21.7 Wired handset troubleshooting — page 131
- 21.8 Wireless troubleshooting (Ray63 / 73 / 90 / 91 only) — page 132

21.1 Troubleshooting

The troubleshooting section provides possible causes and the corrective action required for common problems that are associated with the installation and operation of your product.

Before packing and shipping, all products are subjected to comprehensive testing and quality assurance programs. If you do experience problems with your product, this section will help you to diagnose and correct problems to restore normal operation.

If after referring to this section you are still having problems with your product, please refer to the *Technical support and servicing* section of this manual for useful links and contact details.

Performing a system reset

Note:
Performing a reset will not reset MMSI and ATIS ID number.

From the Maintenance menu: *[Menu > Set-up > Maintenance]*.

1. Select *[System reset]*.
2. Select *[Yes]*.
   The system is now reset to factory defaults.

Note:
Performing the reset will delete all contacts in your Phonebook and reset all user options.

System test

The system test menu can be used to show the status of the system and connected devices.

The System test menu show the status of the following system components and connected devices:

- GPS
- DSC
- Battery
- Hailer
- Remote handset

[OK] is displayed next to each item that is either connected or enabled.

[No] is displayed next to items that are either not connected or disabled.

Checking for RF interference

If you suspect a device may be causing radio frequency (RF) interference you can use your VHF radio to check.

1. Turn off the suspect device.
2. Tune your VHF radio to a quiet channel such as Channel 13.
3. Adjust your radio's Squelch control until the radio outputs audio noise.
4. Re-adjust your radio's Squelch control until the audio is quiet, only slightly above the noise threshold.
5. Turn on the suspect device.
   - If the radio's audio noise increases then the device is causing RF interference.
   - If there is no change in the radio's audio noise then the device is not causing RF interference.

Note:
If RF interference is present then it is likely that both VHF and AIS reception are being degraded by the device.

Multiple antenna installations

Important additional considerations when installing multiple antennas.

To prevent potential channel interference when installing two or more VHF radios on the same vessel, ensure that the antennas are located at least 2.4 m (8 ft.) away from each other.

21.2 Power up troubleshooting

Problems at power up and their possible causes and solutions are described here.

Product does not turn on or keeps turning off

Possible causes	Possible solutions
Operation.	1. Ensure that the radio is fully powered on, by holding the Power button for at least 3 seconds. 2. If your system includes a handset, it has its own independent power button, located on the top edge of the handset. Press and hold the button for at least 3 seconds, until the display lights up.
Blown fuse / tripped breaker.	1. Check the fuse, located inline with the power cable. Ensure that it has the correct rating (10 A), as an under-rated fuse can affect the power supplied to the radio. If the fuse has blown, replace with a new 10 A fuse. 2. Check the condition of relevant / additional fuses and breakers and connections, replace if necessary. 3. If fuse keeps blowing check for cable damage, broken connector pins or incorrect wiring.
Poor / damaged / insecure power supply cable / connections.	1. Check that the power cable connector is fully inserted into the unit and locked in position. 2. Check the power supply cable and connectors for signs of damage or corrosion, replace if necessary. 3. With the unit turned on, try flexing the power cable near to the display connector to see if this causes the unit to re-boot/loose power, replace if necessary. 4. Check the vessel's battery voltage, the condition of the battery terminals and power supply cables, ensuring connections are secure, clean and free from corrosion, replace if necessary. 5. With the product under load (when transmitting at 25 W), using a multi-meter, check for a high voltage drop across all connectors /fuses etc, and replace if necessary.
Incorrect power connection.	The power supply may be wired incorrectly, ensure the installation instructions have been followed.
Power source insufficient.	Check that your power supply (battery or distribution panel) is providing a minimum of 10.2 V to the radio when in standby, and also when transmitting at 25W.

Product will not boot up (re-boot loop)

Possible causes	Possible solutions
Power supply and connection.	See possible solutions from 'Products does not turn on or keeps turning off' above.
Software corruption.	In the unlikely event that the product's software has become corrupted, please try re-flashing the radio and the handsets with the latest software from the Raymarine website: www.raymarine.com/software If you have a handset in your system (Ray63 / 73 / 90 / 91 only) with old software, you might need to put it into programming mode in order to update the software along with the radio. To do this, connect it and then press and hold the *[DISTRESS]* and *[PTT]* buttons together. While holding these buttons, press the *[Power]* button on the handset for 3 seconds. The handset backlight will start flashing. This means that the handset is now in programming mode. Follow the update instructions provided on the software download web page.

21.3 Audio troubleshooting (transmission / reception)

Problems with your VHF radio and their possible causes and solutions are described below:

No audio transmission

Possible causes	Possible solutions
Incorrect settings.	Reset the radio to factory defaults, using the Maintenance menu: *[Menu > Set-up > Maintenance > System reset]*.
Dirt or debris blocking the microphone on the fist mic or Raymic handset.	Check the microphone on the fist mic or Raymic to ensure that the microphone port is clear and not blocked. Clean if necessary.
Incorrect channel type in use.	Ensure you are using only **Simplex** channels for testing, if communicating with another vessel. For example, channels 6, 8, 9, 10, 13, 67, 72, or 73.
Insufficient transmission power.	When communicating with vessels at a distance, ensure the radio is set to transmit at 25 W power. Press the *[HI / LO]* button on the fist mic or the Raymic handset and ensure that the 25 W symbol is displayed.

No audio reception

Possible causes	Possible solutions
Incorrect settings.	Reset the radio to factory defaults, using the Maintenance menu: *[Menu > Set-up > Maintenance > System reset]*.
Incorrect channel type in use.	Ensure you are using only **Simplex** channels for testing, if communicating with another vessel. For example, channels 6, 8, 9, 10, 13, 67, 72, or 73.
Incorrect volume or squelch level.	1. Firstly, verify that noise is audible from the speakers, by setting the Squelch level to zero. To do this, press the *[Vol/Sq]* button

Possible causes	Possible solutions
	a few times until **Squelch** is displayed. Then adjust the level to zero. 2. If there is no noise from the speaker, try adjusting the volume. To do this, press the *[Vol/Sq]* button a few times until **Volume** is displayed. Then adjust the level as required. **Note:** Volume control on each handset in the system and the radio units themselves is independent. 3. If audio / noise can be heard, press the *[Vol/Sq]* button a few times until **Squelch** is displayed. Then adjust the squelch level until the noise stops. 4. If no audio / noise is heard from the speaker after completing the above steps, contact Product Support for further guidance.

Passive speaker troubleshooting

Passive speaker no alarm audio

Possible causes	Possible solutions
Passive speaker connected to second station connector.	Alarm audio is not available on passive speakers connected to the second station connector. Alarm audio should still be heard via the second station handset.

21.4 GNSS (GPS) troubleshooting

Problems with the GNSS (GPS) and their possible causes and solutions are described below.

Before troubleshooting GNSS (GPS) problems, ensure your product has the latest software, by checking the Software Updates page on the Raymarine website www.raymarine.com/software

No Fix

Possible causes	Possible solutions
No GNSS (GPS) receiver connected.	In order to obtain a position fix your product requires a GNSS (GPS) receiver. Your product may include an internal GNSS (GPS) receiver, if not then an external GNSS (GPS) receiver such as the RS150 is required.
No antenna connected to GNSS (GPS) receiver.	Depending on variant, your product may include an internal GNSS (GPS) receiver. The receiver may or may not include an internal antenna. If your product's internal GNSS (GPS) receiver does not include an internal antenna then you will need to connect an external passive antenna to the GNSS (GPS) / GA150 connection.
GNSS (GPS) Antenna location.	For optimum performance, external GNSS (GPS) antennas and GNSS (GPS) receivers that include an internal antenna should be mounted above decks and have a clear, unobstructed view of the sky, and not be in close proximity to any structural bulkheads or other electrical equipment or cables which may cause interference.
GNSS (GPS) switched off.	Ensure your internal GNSS (GPS) receiver is switched on in the relevant settings menu.
Geographic location or prevailing conditions preventing satellite fix.	Check periodically to see if a fix is obtained in better conditions or another geographic location.

No position data or manual GPS source missing

Possible causes	Possible solutions
Internal receiver is switched off.	Ensure your external or internal receiver is switched on.
Wrong Network output selected.	Ensure the correct network type and speed is selected in the *[Network output]* menu: *[Menu > Set-up > Network output]*.
Poor / damaged / insecure cable / connection.	1. Check that the connectors are fully inserted into the unit and locked in position. 2. Check the cables and connectors for signs of damage or corrosion, replace if necessary.

21.5 DSC troubleshooting

DSC functions are not available / working

Possible causes	Possible solutions
MMSI number not programmed.	Programme your MMSI number. Each VHF radio requires a unique MMSI number. In the United States, this MUST be programmed into the unit by an authorized dealer. For more information, refer to: **p.130 — Obtain MMSI (Maritime Mobile Service Identity) number**
Radio is set to ATIS or Marcom-C mode.	Use of DSC is not permitted when in ATIS or Marcom-C mode. You will be unable to make DSC distress and other types of digital selective call. If you are not in an ATIS region switch off ATIS mode: *[Menu > Set-up > ATIS set-up > ATIS]*.

Obtain MMSI (Maritime Mobile Service Identity) number

Before commencing installation ensure you have obtained an MMSI number for your vessel.

An MMSI is a 9 digit number which is sent over a radio frequency channel in order to identify the originating vessel/station. If your vessel already has an MMSI number (used for a VHF DSC radio) then the same MMSI number must be used to program your product.

Note:
If an MMSI number is not entered, the DSC functionality of your radio will be disabled.

In the United States of America, the MMSI and Static Data must be entered only by a Raymarine® dealer or other appropriately qualified installer of marine communications equipment on board vessels. The user is NOT authorized to do this.

In some areas, a radio operator licence is required before an MMSI number will be issued. You can request an MMSI number from same agency that issues radio or Ship Radio licences in your area.

In Europe and other parts of the world outside of the United States of America, the MMSI and Static data can be set up by the user.

For further details, refer to the relevant Telecommunications Regulatory Body for your area.

For a list of issuing authorities for licences and MMSI numbers in each region, refer to: **p.158 — Licensing and MMSI issuing authorities**

21.6 AIS troubleshooting (Ray70 / 73 / 91 only)

AIS functions are not available / working (Ray70 / Ray63 / Ray91 only)

Possible causes	Possible solutions
MMSI number not programmed.	Programme your MMSI number. Each VHF radio requires a unique MMSI number. In the United States, this MUST be programmed into the unit by an authorized dealer. For more information, refer to: **p.130 — Obtain MMSI (Maritime Mobile Service Identity) number**
VHF radio is not connected to a multifunction display via SeaTalk NG / NMEA®, or the connection is not correctly configured.	Check the diagnostics on the multifunction display to confirm that the VHF radio is connected on the network. Access the VHF radio's *[Set-up]* menu and ensure that the *[Network output]* option is set correctly. If the VHF radio is connected to an MFD via NMEA 0183, ensure that the VHF radio's *[Network output]* option in the Set-up menu is set to "0183 High Speed". Ensure also that the MFD's NMEA 0183 connection is configured to 38400 baud rate.
AIS functions are not enabled on the VHF radio.	Access the VHF radio's *[Set-up]* menu and ensure that the *[AIS]* option is set to "On".
AIS functions are not enabled on the MFD.	Ensure that both *[AIS Presentation]* and *[AIS Targets]* are enabled for the MFD. For instructions on how to do this, refer to the Operation instructions for your MFD.

21.7 Wired handset troubleshooting

Wired handset will not power up

Possible causes	Possible solutions
Handset not turned on	The Wired handset is supplied power from the Base station. Press the Power button located on the top of the Handset to power it on. If you have a handset in your system with old software, you might need to put it into programming mode in order to update the software along with the radio. To do this, connect it and then press and hold the *[DISTRESS]* and *[PTT]* buttons together. While holding these buttons, press the *[Power]* button on the handset for 3 seconds. The handset backlight will start flashing. This means that the handset is now in programming mode. Follow the update instructions provided on the software download web page.
Software Base station / Handset mismatch	The Handset and Base station must both be running compatible software, refer to the Raymarine website for details of compatible software versions: www.raymarine.com/software.
Poor / damaged / insecure cables / connections	1. Check that the Base station radio is correctly powered. 2. With the Handset turned on, try flexing the cable near to the connectors to see if this causes the Handset to re-boot/loose power, replace if necessary. 3. Check cable connections are secure, clean and free from corrosion, replace if necessary.

Handset display problems

Possible causes	Possible solutions
Handset is not powered on	Hold down the *[Power]* button located on the top edge of the handset, until the display backlight comes on.
Incompatible software	The handset software may need updating, or there may be a mismatch between the handset and basestation software versions. To update the software, visit www.raymarine.com/software and download the latest software. Ensure the VHF radio is connected via SeaTalk NG to a Raymarine multifunction display (MFD), and then follow the instuctions provided on the software download website. (The VHF radio software can only be updated via a Raymarine MFD).

21.8 Wireless troubleshooting (Ray63 / 73 / 90 / 91 only)

Before troubleshooting problems with your wireless connection, ensure that you have followed the Wireless location requirements guidance provided in the relevant installation instructions and performed a power cycle/reboot of the devices you are experiencing problems with.

Wireless handset not powering up

Possible causes	Possible solutions
Wireless handset's battery is not charged.	1. Ensure the handset's charging holster is correctly connected to a 12 V dc power supply. 2. Place the handset in the charging holster. 3. Ensure the battery symbol is displayed on the handset screen. **Note:** When charging a very low or completely flat battery, it might take some time for the display to light up once placed in the cradle and charging.

Cannot find network

Possible causes	Possible solutions
Devices not powered or connected.	Ensure the Wireless hub is connected to the Hub connection on the Base station and that the Base station is powered on.
Devices out of range or signal being blocked.	Move devices closer together or, if possible remove the obstructions and then re-scan available networks.
Software mismatch on radio / wireless hub / wireless handset.	The radio, wireless hub, and wireless handset must all be running compatible software. If the software on the radio and handsets is up to date, the wireless hub will update automatically. To obtain information on compatible software versions and also to obtain the latest software, visit the Raymarine website: www.raymarine.com/software

Cannot connect to hub

Possible causes	Possible solutions
Trying to connect to the wrong device.	Ensure you are trying to connect to the correct device; you can find your Wireless hub's name using a Wired handset: (*[Menu > Set-up > Wireless set-up > Wireless hub set-up > Hub name]*).
Incorrect password.	Ensure you are trying to connect using the correct password; you can find your Wireless hub's password using a Wired handset: (*[Menu > Set-up > Wireless set-up > Wireless hub set-up > Password]*).
Bulkheads, decks and other heavy structure can degrade and even block the wireless signal. Depending on the material and its thickness, it may not always be possible to pass a wireless signal through certain structures.	1. Try repositioning the Wireless hub so that heavy structure is removed from the direct line-of-sight between the devices, or: 2. Use the Wireless hub antenna extension accessory (A80541) to move the wireless hub to an area with fewer obstacles.

Connection extremely slow and/or keeps dropping out

Possible causes	Possible solutions
Wireless performance degrades over distance, so products farther away will receive less network bandwidth. Products installed close to their maximum wireless range will experience slow connection speeds, signal drop outs or no connection at all.	Move devices closer together.
Interference being caused by other wireless-enabled devices.	1. Change the hub's wireless channel and retry the connection. You can use free wireless analyzer apps on your smartphone or tablet to help you choose a less-congested channel. 2. Switch off each wireless device in turn until you have identified the device causing the interference.
Interference caused by other devices that use the 2.4 GHz frequency See list below of	Switch off each device in turn until you have identified the device causing the interference, then remove or reposition the offending device(s) or your wireless hub / handset..

Possible causes	Possible solutions
some common devices that use the 2.4 GHz frequency: • Microwave ovens • Fluorescent lighting • Cordless phones / baby monitors • Motion sensors	
Interference caused by electrical and electronic devices and associated cabling could generate an electromagnetic field which may interfere with the wireless signal.	Switch off each item in turn until you have identified the device causing the interference, then remove or reposition the offending device(s) or your wireless hub / handset.
Interference from devices on other vessels. When in close proximity to other vessels, many other wireless signals may be present; for example, when moored up in a marina.	1. Change the hub's wireless channel and retry the connection. You can use free wireless analyzer apps on your smartphone or tablet to help you choose a less congested channel. 2. If possible, move your vessel to a location with less wireless traffic.

Network connection established but no data

Possible causes	Possible solutions
Connected to the wrong network.	Ensure that your handset is connected to the correct wireless hub.
Device software incompatibility.	The radio, wireless hub, and wireless handset must all be running compatible software. If the software on the radio and handsets is up to date, the wireless hub will update automatically. You can check device software from the Maintenance menu: *[Menu > Set-up > Maintenance > About this unit]*. To obtain information on compatible software versions and also to obtain the latest software, visit the Raymarine website: www.raymarine.com/software
It may be possible that the device has become defective.	1. Try updating software to a later version, or try reinstalling the current software. 2. Contact technical support for further assistance.

LED diagnostic guidance

Your product has diagnostic LEDs which can be used to identify the unit's status and to help troubleshoot any potential issues that may occur.

The following section provides two basic examples of how to interpret the LED diagnostic patterns included in this publication.

Example solid LED diagnostic pattern:

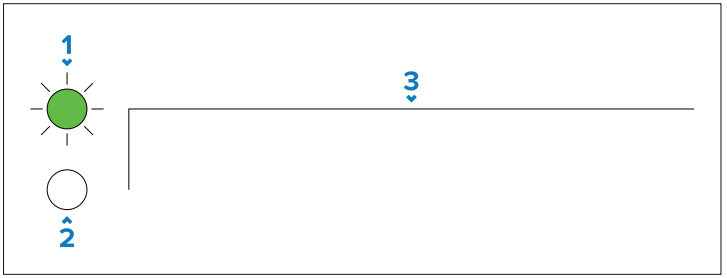

1. **LED ON** — Indicates the color assigned to the unit's diagnostic LED, and confirms that the diagnostic LED is active (switched **on**).
2. **LED OFF** — Indicates that the unit's diagnostic LED is inactive (switched **off**).
3. **Diagnostic pattern** — Indicates a diagnostic pattern based on the number and duration of *peaks* (indicating LED is switched **on**) and *troughs* (indicating LED is switched **off**) generated within the duration of the diagnostic pattern. In the example shown above, a continuous peak occurs, indicating that the LED is permanently **on**.

Example flashing LED diagnostic pattern:

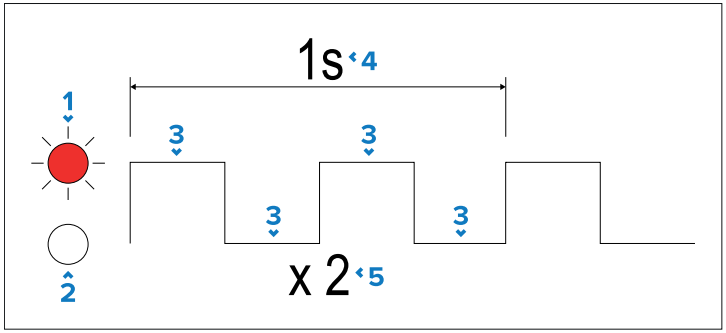

1. **LED ON** — Indicates the color assigned to the unit's diagnostic LED, and confirms that the diagnostic LED is active (switched **on**).
2. **LED OFF** — Indicates that the unit's diagnostic LED is inactive (switched **off**).
3. **Diagnostic pattern** — Indicates a diagnostic pattern based on the number and duration of *peaks* (indicating LED is switched **on**) and *troughs* (indicating LED is switched **off**) generated within the duration of the diagnostic pattern. In the example shown above, a peak followed by a trough occurs and then repeats again, indicating that the LED flashes twice within a period of one second.
4. **Diagnostic pattern duration** — Indicates the total duration of the diagnostic pattern.
5. **Diagnostic pattern flash total** — Indicates the total number of flashes that occur within the diagnostic pattern.

LED diagnostics — Wireless (Active) speaker

Sequence	Status
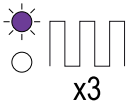	**Purple** Powering on
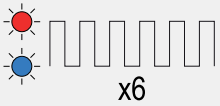	**Red and Blue** Ready to pair / connect
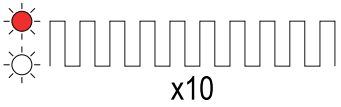	**Red** Paired OK
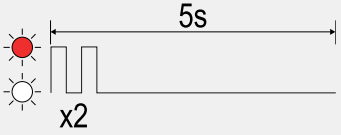	**Red** Connected, no audio
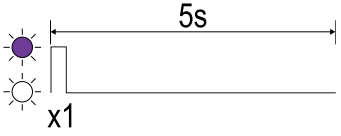	**Purple** Connected, audio active
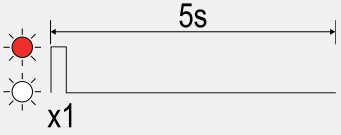	**Red** Powered on, not connected

CHAPTER 22: TECHNICAL SUPPORT

CHAPTER CONTENTS

- 22.1 Raymarine technical support and servicing — page 137
- 22.2 Viewing product information — page 138
- 22.3 Learning resources — page 138

22.1 Raymarine technical support and servicing

Raymarine provides a comprehensive product support service, as well as warranty, service, and repairs. You can access these services through the Raymarine website, telephone, and e-mail.

Product information

If you need to request service or support, please have the following information to hand:

- Product name.
- Product identity.
- Serial number.
- Software application version.
- System diagrams.

Servicing and warranty

Raymarine offers dedicated service departments for warranty, service, and repairs.
Visit the Raymarine website to **read the latest warranty policy**, and **register** your product's warranty online:

- www.bit.ly/rym-warranty

United Kingdom (UK), EMEA, and Asia Pacific:

- Web: www.bit.ly/rym-service
- Tel: +44 (0)1329 246 932

United States (US):

- Web: www.bit.ly/rym-service
- Tel: +1 (603) 324 7900

Web support

Please visit the "Support" area of the Raymarine website for:

- **Manuals and Documents** — www.bit.ly/rym-docs
- **Technical support forum** — www.bit.ly/rym-support
- **Software updates** — www.bit.ly/rym-software

Telephone and online support

Region	Contact details
All regions	**Online support:** www.bit.ly/rym-support
United Kingdom (UK) and EMEA	**Telephone:** +44 (0)1329 246 777 **Address:** Marine House, Cartwright Drive, Fareham, PO15 5RJ, UK.
United States (US)	**Telephone:** Tel: +1 (603) 324 7900 (Toll-free: +800 539 5539) **Address:** 110 Lowell Road, Hudson, NH 03051, USA.
Australia and New Zealand (Raymarine subsidiary)	**Telephone:** +61 2 8977 0300 **Address:** Suite 1.01, 26 Rodborough Road, Frenchs Forest, NSW, 2086, Australia.
France (Raymarine subsidiary)	**Telephone:** +33 (0)1 46 49 72 30 **Address:** 35 avenue Michel Crépeau, 17000 La Rochelle - France.
Germany (Raymarine subsidiary)	**Telephone:** +49 40 237 808 0 **Address:** Atlantic-Haus, Zirkusweg 1, 20359 Hamburg.
Italy (Raymarine subsidiary)	**Telephone:** +39 02 9945 1001 **Address:** Via L. Manara 2, 20812 Limbiate (MB), Italy.
Spain (Authorized Raymarine distributor)	**Telephone:** +34 96 2965 102 **Email:** sat@azimut.es
Netherlands / Benelux (Authorized Raymarine distributor)	**Telephone:** +31 (0)26 3614 905 **Address:** Florijnweg 21G, 6883 JN VELP, Nederland.

Region	Contact details
Sweden (Raymarine subsidiary)	**Telephone:** +46 (0)317 633 670 **Address:** Bolshedens Industriväg 18, 427 50 Billdal, Sweden.
Finland (Raymarine subsidiary)	**Telephone:** +358 (0)207 619 937 **Address:** Suomalaistentie 1-3, 02270 Espoo, Finland.
Norway (Raymarine subsidiary)	**Telephone:** +47 692 64 600 **Address:** Årvollskogen 30, 1529 Moss, Norway.
Denmark (Raymarine subsidiary)	**Telephone:** +45 437 164 64 **Address:** Centervej 7, 4600 Køge, Denmark.
Russia (Distributor)	**Telephone:** Tel: +7 495 788 0508 **Email:** info@mikstmarine.ru

22.2 Viewing product information

Product information can be found on the Startup screen.

1. Power up the radio.

   The startup screen is displayed which shows the model and software version of the product.

Alternatively product information can also be displayed by selecting *[About this unit]* from the *[Maintenance]* menu: *[Menu > Set-up > Maintenance]*.

22.3 Learning resources

Raymarine has produced a range of learning resources to help you get the most out of your products.

Video tutorials

Raymarine official channel on YouTube

- http://www.youtube.com/user/RaymarineInc

Training courses

Raymarine regularly runs a range of in-depth training courses to help you make the most of your products. Visit the Training section of the Raymarine website for more information:

- www.bit.ly/rym-training

Technical support forum

You can use the Technical support forum to ask a technical question about a Raymarine product or to find out how other customers are using their Raymarine equipment. The resource is regularly updated with contributions from Raymarine customers and staff:

- www.bit.ly/rym-support

CHAPTER 23: TECHNICAL SPECIFICATION

CHAPTER CONTENTS

- 23.1 Technical specification — Ray53 — page 140
- 23.2 Technical specification — Ray63 — page 141
- 23.3 Technical specification — Ray73 — page 143
- 23.4 Technical specification — Wired handset (Raymic) — page 145
- 23.5 Technical specification — Wired (Passive) speaker — page 145
- 23.6 Technical specification — Wireless hub — page 146
- 23.7 Technical specification — Wireless handset — page 146
- 23.8 Technical specification — Wireless handset charging holster — page 146
- 23.9 Technical specification — Wireless (Active) speaker — page 147

23.1 Technical specification — Ray53

Environmental specification

Specification	
Operating temperature:	-20°C (-4°F) to +60°C (140°F)
Storage temperature:	-25°C (-13°F) to +70°C (158°F)
Relative humidity:	95%
Water proofing:	IPx6 & IPx7
Connections:	• 1 x NMEA 0183 • 1 x SeaTalk NG / NMEA 2000 • 1 x Audio (RCA) • 1 x GNSS (GPS) antenna (TNC)

Power specification

Specification	
Nominal supply voltage:	12 V dc (Reverse polarity and over voltage protection)
Operating voltage range:	9 V dc to 16 V dc
Current consumption:	• Less than 6 A at high power (13.6 V) • Standby: 600 mA • Receive: 2 A

Transmitter specification

Specification	
Channels:	All available US, International and Canadian VHF marine bands
Frequency Range:	156.000 MHz to 157.425 MHz / 155.500 MHz to 161.425 MHz (Private channels)
Frequency stability:	+/- 1.5 ppm
Channel Spacing:	25 kHz
Power Output:	• Low power setting — 1 W • High power setting — 25 W
Spurious emissions:	Better than –36 dBm at 25 W (Less than 0.25 µW)
Maximum deviation:	+/- 5 kHz
Antenna impedance:	50 Ω (typical)

Receiver specification

Specification	
Receiver type:	Double conversion super heterodyne
Channels:	All available US, International and Canadian VHF marine bands
Frequency range:	156.050 MHz to 163.275 MHz / 155.500 MHz to 161.425 MHz (Private channels)
Sensitivity:	Better than 1 microvolt EMF @ 20dB SINAD
Squelch sensitivity:	Less than —2 dBµ EMF
Hum and noise:	Better than –40 dB
Audio distortion:	Less than 10%
Receiver sensitivity:	• Distance — 119dBm (0.25uV) @ 12dB SINAD (typical) • Local — 110dBm (0.7uV) @ 12dB SINAD (typical)
Adjacent channel selectivity:	More than 70 dB
Spurious response rejection:	More than 70 dB
Inter modulation rejection:	More than 68 dB

Speaker specification

Specification	
Base station speaker power output:	2.5 W (8 Ω)
Fistmic speaker power:	1 W (16 Ω)
External speaker power:	5 W (8 Ω)

GNSS (GPS) specification

Specification	
Channels:	72
Cold start:	< 2 minutes
Receiver IC Sensitivity:	–167 dBm (Tracking) / –148 dBm (Acquisition)
GNSS compatibility:	• GPS • GLONASS • * Beidou
SBAS compatibility	• WAAS • EGNOS • MSAS
Special features:	Active Jamming and Interference Reduction
Operating frequency:	• GPS L1 C/A • GLONASS L10F • Beidou B1
Signal Acquisition:	Automatic
Almanac Update:	Automatic
Geodetic Datum:	WGS-84 (alternatives available through Raymarine MFD)
Refresh Rate:	10 Hz (10 times per second Concurrent GNSS)

Specification	
Antenna:	• Internal — Ceramic chip mounted near top of unit • External — Passive antenna connection via TNC connector
Position Accuracy:	• Without SBAS: <= 15 meters 95% of the time • With SBAS: <= 5 meters 95% of the time

23.2 Technical specification — Ray63

Environmental specification

Specification	
Operating temperature:	-20°C (-4°F) to +60°C (140°F)
Storage temperature:	-25°C (-13°F) to +70°C (158°F)
Relative humidity:	95%
Water proofing:	IPx6 & IPx7
Connections:	• 1 x NMEA 0183 • 1 x SeaTalk NG / NMEA 2000 • 1 x Front Fistmic connection • 1 x Rear connection for 2nd station • 1 x Audio (RCA) • 1 x GNSS (GPS) antenna (TNC)

Power specification

Specification	
Nominal supply voltage:	12 V dc (Reverse polarity and over voltage protection)
Operating voltage range:	9 V dc to 16 V dc
Current consumption:	• Less than 6 A at high power (13.6 V) • Standby: 600 mA • Receive: 2 A

Transmitter specification

Specification	
Channels:	All available US, International and Canadian VHF marine bands
Frequency Range:	156.000 MHz to 157.425 MHz / 155.500 MHz to 161.425 MHz (Private channels)
Frequency stability:	+/- 1.5 ppm
Channel Spacing:	25 kHz
Power Output:	• Low power setting — 1 W • High power setting — 25 W
Spurious emissions:	Better than –36 dBm at 25 W (Less than 0.25 µW)
Maximum deviation:	+/- 5 kHz
Antenna impedance:	50 Ω (typical)

Receiver specification

Specification	
Receiver type:	Double conversion super heterodyne
Channels:	All available US, International and Canadian VHF marine bands
Frequency range:	156.050 MHz to 163.275 MHz / 155.500 MHz to 161.425 MHz (Private channels)
Sensitivity:	Better than 1 microvolt EMF @ 20dB SINAD
Squelch sensitivity:	Less than —2 dBµ EMF
Hum and noise:	Better than –40 dB
Audio distortion:	Less than 10%
Receiver sensitivity:	• Distance — 119dBm (0.25uV) @ 12dB SINAD (typical) • Local — 110dBm (0.7uV) @ 12dB SINAD (typical)
Adjacent channel selectivity:	More than 70 dB
Spurious response rejection:	More than 70 dB
Inter modulation rejection:	More than 68 dB

Speaker specification

Specification	
Base station speaker power output:	2.5 W (8 Ω)
Fistmic speaker power output:	1 W (16 Ω)
External speaker power output:	5 W (8 Ω)
Handset speaker power output:	1 W (16 Ω)

GNSS (GPS) specification

Specification	
Channels:	72
Cold start:	< 2 minutes
Receiver IC Sensitivity:	–167 dBm (Tracking) / –148 dBm (Acquisition)
GNSS compatibility:	• GPS • GLONASS • * Beidou
SBAS compatibility:	• WAAS • EGNOS • MSAS
Special features:	Active Jamming and Interference Reduction
Operating frequency:	• GPS L1 C/A • GLONASS L10F • Beidou B1
Signal Acquisition:	Automatic
Almanac Update:	Automatic
Geodetic Datum:	WGS-84 (alternatives available through Raymarine MFD)
Refresh Rate:	10 Hz (10 times per second Concurrent GNSS)
Antenna:	• Internal — Ceramic chip mounted near top of unit • External — Passive antenna connection via TNC connector
Position Accuracy:	• Without SBAS: <= 15 meters 95% of the time • With SBAS: <= 5 meters 95% of the time

23.3 Technical specification — Ray73

Environmental specification

Specification	
Operating temperature:	-20°C (-4°F) to +60°C (140°F)
Storage temperature:	-25°C (-13°F) to +70°C (158°F)
Relative humidity:	95%
Water proofing:	IPx6 & IPx7
Connections:	• 1 x NMEA 0183 • 1 x SeaTalk NG / NMEA 2000 • 1 x Front Fistmic connection • 1 x Rear connection for 2nd station • 1 x Audio (RCA) • 1 x Loud Hailer connection wires • 1 x GNSS (GPS) antenna (TNC)

Power specification

Specification	
Nominal supply voltage:	12 V dc (Reverse polarity and over voltage protection)
Operating voltage range:	9 V dc to 16 V dc
Current consumption:	• Less than 6 A at high power (13.6 V) • Standby: 600 mA • Receive: 2 A • Loud hailer: 3 A (8 Ω) / 6 A (4 Ω)

Transmitter specification

Specification	
Channels:	All available US, International and Canadian VHF marine bands
Frequency Range:	156.000 MHz to 157.425 MHz / 155.500 MHz to 161.425 MHz (Private channels)
Frequency stability:	+/- 1.5 ppm
Channel Spacing:	25 kHz
Power Output:	• Low power setting — 1 W • High power setting — 25 W
Spurious emissions:	Better than –36 dBm at 25 W (Less than 0.25 µW)
Maximum deviation:	+/- 5 kHz
Antenna impedance:	50 Ω (typical)

Receiver specification

Specification	
Receiver type:	Double conversion super heterodyne
Channels:	All available US, International and Canadian VHF marine bands
Frequency range:	156.050 MHz to 163.275 MHz / 155.500 MHz to 161.425 MHz (Private channels)
Sensitivity:	Better than 1 microvolt EMF @ 20dB SINAD
Squelch sensitivity:	Less than —2 dBµ EMF
Hum and noise:	Better than –40 dB
Audio distortion:	Less than 10%
Receiver sensitivity:	• Distance — 119dBm (0.25uV) @ 12dB SINAD (typical) • Local — 110dBm (0.7uV) @ 12dB SINAD (typical)
Adjacent channel selectivity:	More than 70 dB
Spurious response rejection:	More than 70 dB
Inter modulation rejection:	More than 68 dB

Speaker specification

Specification	
Base station speaker power output:	2.5 W (8 Ω)
Fistmic speaker power output:	1 W (16 Ω)
External speaker power output:	5 W (8 Ω)
Handset speaker power output:	1 W (16 Ω)
Hailer speaker power output:	25 W (4 Ω) / 12 W (8 Ω)

AIS specification

Specification	
Class type:	AIS receiver only

GPS specification

Specification	
Channels:	72
Cold start:	< 2 minutes
Receiver IC Sensitivity:	–167 dBm (Tracking) / –148 dBm (Acquisition)

Specification	
GNSS compatibility:	• GPS • GLONASS • * Beidou
SBAS compatibility:	• WAAS • EGNOS • MSAS
Special features:	Active Jamming and Interference Reduction
Operating frequency:	• GPS L1 C/A • GLONASS L10F • Beidou B1
Signal Acquisition:	Automatic
Almanac Update:	Automatic
Geodetic Datum:	WGS-84 (alternatives available through Raymarine MFD)
Refresh Rate:	10 Hz (10 times per second Concurrent GNSS)
Antenna:	• Internal — Ceramic chip mounted near top of unit • External — Passive antenna connection via TNC connector
Position Accuracy:	• Without SBAS: <= 15 meters 95% of the time • With SBAS: <= 5 meters 95% of the time

23.4 Technical specification — Wired handset (Raymic)

The following technical specifications apply to the Wired handset.

Specification	
Operating temperature:	-25°C (-13°F) to +55°C (131°F)
Storage temperature:	-25°C (-13°F) to +70°C (158°F)
Relative humidity:	95%
Water proofing:	IPx6 & IPx7
Max speaker power output:	1 W (16 Ω)
VHF radio compatibility:	• Ray90 / Ray91 • Ray63 / Ray73 • Ray60 / Ray70

23.5 Technical specification — Wired (Passive) speaker

Specification	
Operating temperature:	-25°C (-13°F) to +55°C (131°F)
Storage temperature:	-25°C (-13°F) to +70°C (158°F)
Relative humidity:	95%
Water proofing:	IPx6 & IPx7
Max speaker power output:	5 W (8 Ω)
Connection:	RCA female connector, connects to Wired handset via adaptor cable (A80297)
VHF radio compatibility:	• Ray90 / Ray91 • Ray53 / Ray63 / Ray73 • Ray50 / Ray52 / Ray60 / Ray70

23.6 Technical specification — Wireless hub

The following technical specification applies to the Wireless hub accessory.

Specification	
Operating temperature:	-25°C (-13°F) to +55°C (131°F)
Storage temperature:	-25°C (-13°F) to +70°C (158°F)
Relative humidity:	95%
Water proofing:	IPx6 & IPx7
Wireless frequency:	2.4 GHz
Connections:	• Connects to Base station via 12-pin connector. • Connects wireless handsets via 2.4 GHz wireless connection.
VHF radio compatibility:	• Ray90 / Ray91 • Ray63 • Ray73

23.7 Technical specification — Wireless handset

Wireless handset

Specification	
Operating temperature:	-25°C (-13°F) to +55°C (131°F)
Storage temperature:	-25°C (-13°F) to +70°C (158°F)
Relative humidity:	95%
Water proofing:	IPx6 & IPx7
Max speaker power output:	1 W (16 Ω)
Wireless frequency:	2.4 GHz
Connections:	• x 1 Wireless hub connection via 2.4 GHz wireless connection • x 1 Wireless (Active) speaker via 2.4 GHz wireless connection
VHF radio compatibility:	• Ray90 / Ray91 • Ray63 / Ray73

Battery specification

Specification	
Battery type:	Rechargeable Lithium ion
Replaceable:	No
Capacity:	2000 mAh
Talk time:	8 hours
Standby:	100 hours
Charge time:	5 hours

23.8 Technical specification — Wireless handset charging holster

Power specification

Specification	
Nominal supply voltage:	12 V dc (with over-voltage protection)
Operating voltage range:	10.2 V dc to 16 V dc
Fuse requirements:	• Inline fuse = 2 A • Thermal breaker = 2 A
Current consumption:	1 A nominal
Charge type:	Wireless inductive charging
Power output:	1 A

Environmental specification

Specification	
Operating temperature:	-25°C (-13°F) to +55°C (131°F)
Storage temperature:	-25°C (-13°F) to +70°C (158°F)
Relative humidity:	95%
Water proofing:	IPx6 & IPx7

23.9 Technical specification — Wireless (Active) speaker

Power specification

Specification	
Nominal supply voltage:	12 V dc (with over voltage protection)
Operating voltage range:	10.2 V dc to 16 V dc
Fuse requirements:	• Inline fuse = 2 A • Thermal breaker = 2 A
Current consumption:	1 A nominal
Max speaker power output:	5 W (8 Ω)

Environmental specification

Specification	
Operating temperature:	-25°C (-13°F) to +55°C (131°F)
Storage temperature:	-25°C (-13°F) to +70°C (158°F)
Relative humidity:	95%
Water proofing:	IPx6 & IPx7

Connections

Specification	
Connection:	x 1 Wireless handset connection via 2.4 GHz Wireless connection
VHF radio compatibility (via wireless hub):	• Ray90 / Ray91 • Ray63 / Ray73

CHAPTER 24: SPARES AND ACCESSORIES

CHAPTER CONTENTS

- 24.1 Accessories — page 149
- 24.2 Ray53 / Ray63 / Ray73 spares — page 149
- 24.3 SeaTalk NG cables and accessories — page 150

24.1 Accessories

The following accessories are available;

Base station accessories

Part number	Description
A80288	Passive GNSS (GPS) antenna
M95435	Loud hailer / Fog horn

Wired handset station accessories

Part number	Description
A80542	Wired passive speaker
A80289	Wired handset including mounting holster
A80291	Wired handset extension cable 5 m (16.4 ft)
A80292	Wired handset extension cable 10 m (32.8 ft)
A80290	Wired handset extension cable 15 m (49.2 ft)
A80297	Wired handset adaptor cable with male RCA audio (400 mm 1.3 ft)

Wireless handset station accessories

Part number	Description
A80540	Wireless hub
A80541	Wireless hub antenna extension 5m (16.4 ft)
A80543	Wireless active speaker
A80544	Wireless handset including charging holster
R70739	Wireless hub adaptor for Ray63/Ray73

24.2 Ray53 / Ray63 / Ray73 spares

The following spares are available:

Part number	Description
R70616	Wireless handset
R70617	Wireless handset charging holster
R70618	Volume knob for the wireless active speaker
R70619	Bezel for passive and active speaker
R70492	Wired handset holster
R70438	Panel mount fixing kit
R70484	Handset hook plate (mounting clip)
R70432	Volume/Squelch control knob and OK knob (Black) — (Ray53)
R70737	Volume/Squelch control knob and OK knob (Black) — (Ray63 / Ray73)
R70620	Black bezel (Ray63 / Ray73)
R70437	Suncover (Ray53)
A80620	Suncover (Ray63 / Ray73)
R70689	Wireless hub antenna

24.3 SeaTalk NG cables and accessories

SeaTalk NG cables and accessories for use with compatible products.

SeaTalk NG kits

SeaTalk NG kits enable you to create a simple SeaTalk NG backbone. **Starter kit (part number: T70134)** consists of:

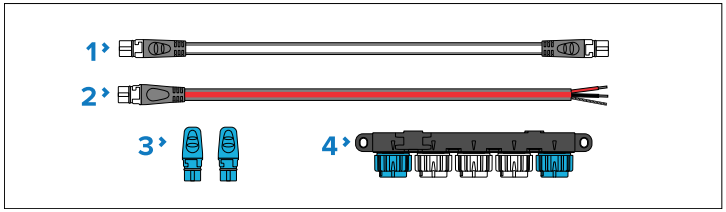

1. 1 x Spur cable 3 m (9.8 ft) (part number: **A06040**). Used to connect device to the SeaTalk NG backbone.
2. 1 x Power cable 2 m (6.6 ft) (part number: **A06049**). Used to provide 12 V dc power to the SeaTalk NG backbone.
3. 2 x Backbone terminators (part number: **A06031**). Terminators must be fitted to both ends of the SeaTalk NG backbone.
4. 1 x 5-Way connector (part number: **A06064**). Each connector block allows connection of up to 3 SeaTalk NG devices. Multiple connector blocks can be 'daisy chained' together.

Backbone kit (part number: A25062) consists of:

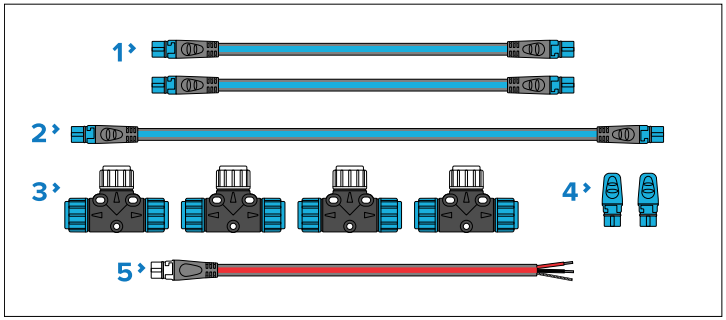

1. 2 x Backbone cables 5 m (16.4 ft) (part number: **A06036**). Used to create and extend the SeaTalk NG backbone.
2. 1 x Backbone cable 20 m (65.6 ft) (part number: **A06037**). Used to create and extend the SeaTalk NG backbone.
3. 4 x T-piece (part number: **A06028**). Each T-piece allows connection of one SeaTalk NG device. Multiple T-pieces can be 'daisy chained' together.
4. 2 x Backbone terminators (part number: **A06031**). Terminators must be fitted to both ends of the SeaTalk NG backbone.
5. 1 x Power cable 2 m (6.6 ft) (part number: **A06049**). Used to provide 12 V dc power to the SeaTalk NG backbone.

Evolution-Series autopilot cable kit (part number: R70160) consists of:

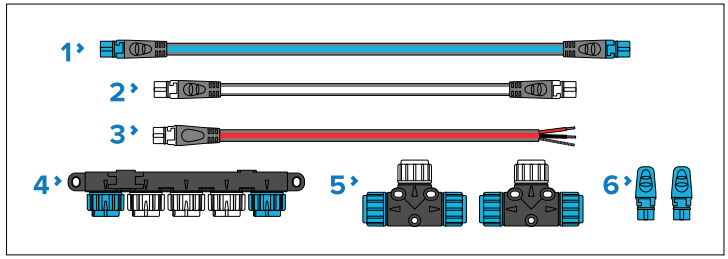

1. 1 x Backbone cable 5 m (16.4 ft) (part number: **A06036**). Used to create and extend the SeaTalk NG backbone.
2. 1 x Spur cable 1 m (3.3 ft) (part number: **A06040**). Used to connect device to the SeaTalk NG backbone.
3. 1 x Power cable 2 m (6.6 ft) (part number: **A06049**). Used to provide 12 V dc power to the SeaTalk NG backbone.
4. 1 x 5-Way connector (part number: **A06064**). Each connector block allows connection of up to 3 SeaTalk NG devices. Multiple connector blocks can be 'daisy chained' together.
5. 2 x T-pieces (part number: **A06028**). Each T-piece allows connection of one SeaTalk NG device. Multiple T-pieces can be 'daisy chained' together.
6. 2 x Backbone terminators (part number: **A06031**). Terminators must be fitted to both ends of the SeaTalk NG backbone.

SeaTalk 1 to SeaTalk NG converter kit (part number: E22158) consists of:

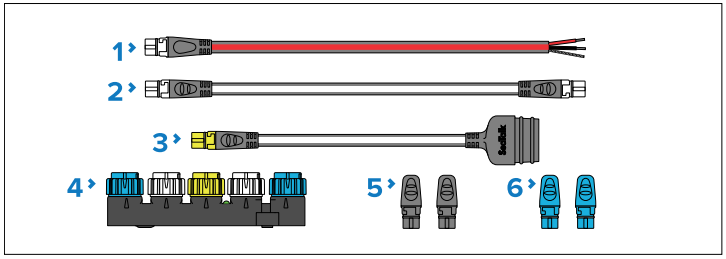

1. 1 x Power cable 2 m (6.6 ft) (part number: **A06049**). Used to provide 12 V dc power to the SeaTalk NG backbone.
2. 1 x Spur cable 1 m (3.3 ft) (part number: **A06039**). Used to connect a device to the SeaTalk NG backbone.
3. 1 x SeaTalk 1 (3 pin) to SeaTalk NG adapter cable 0.4 m (1.3 ft) (part number: **A22164**). Used to connect SeaTalk 1 devices to the SeaTalk NG backbone via the SeaTalk 1 to SeaTalk NG converter.
4. 1 x SeaTalk 1 to SeaTalk NG converter (part number: **E22158**). Each converter allows connection of one SeaTalk 1 device and up to 2 SeaTalk NG devices.
5. 2 x Spur blanking plugs (part number: **A06032**). Used to cover unused spur connections in 5-way blocks, T-piece connectors and SeaTalk 1 to SeaTalk NG converter.
6. 2 x Backbone terminators (part number: **A06031**). Terminators must be fitted to both ends of the SeaTalk NG backbone.

NMEA 0183 VHF 2-wire to SeaTalk NG converter kit (part number: E70196) consists of:

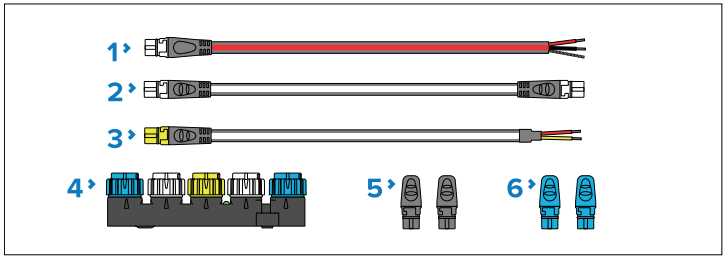

1. 1 x Power cable 2 m (6.6 ft) (part number: **A06049**). Used to provide 12 V dc power to the SeaTalk NG backbone.
2. 1 x Spur cable 1 m (3.3 ft) (part number: **A06039**). Used to connect a device to the SeaTalk NG backbone.
3. 1 x NMEA 0183 VHF stripped-end (2-wire) to SeaTalk NG adapter cable 1 m (3.3 ft) (part number: **A06071**). Used to connect an NMEA 0183 VHF radio to the SeaTalk NG backbone via the NMEA 0183 to SeaTalk NG converter.
4. 1 x SeaTalk 1 to SeaTalk NG converter (part number: **E22158**). Each converter allows connection of one SeaTalk 1 device and up to 2 SeaTalk NG devices.
5. 2 x Spur blanking plugs (part number: **A06032**). Used to cover unused spur connections in 5-way blocks, T-piece connectors, and the SeaTalk 1 to SeaTalk NG converter.
6. 2 x Backbone terminators (part number: **A06031**). Terminators must be fitted to both ends of the SeaTalk NG backbone.

SeaTalk NG spur cables

SeaTalk NG spur cables are required to connect devices to the SeaTalk NG backbone.

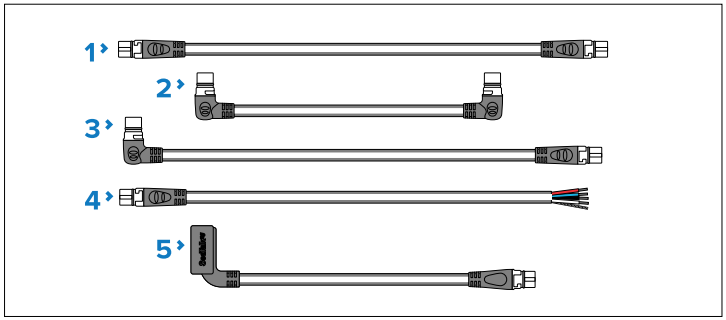

1. SeaTalk NG spur cables:
   - Spur cable 0.4 m (1.3 ft) (part number: **A06038**).
   - Spur cable 1 m (3.3 ft) (part number: **A06039**).
   - Spur cable 3 m (9.8 ft) (part number: **A06040**).
   - Spur cable 5 m (16.4 ft) (part number: **A06041**).
2. Elbow (right-angled) to elbow (right-angled) spur cable 0.4 m (1.3 ft) (part number: **A06042**). Used in confined spaces where a straight spur cable will not fit.
3. Elbow (right-angled) to straight spur cable 1 m (3.3 ft) (part number: **A06081**). Used in confined spaces where a straight spur cable will not fit.

4. SeaTalk NG to stripped-end spur cables (connects compatible products that do not have a SeaTalk NG connector, such as transducer pods):
   - SeaTalk NG to stripped-end spur cable 1 m (3.3 ft) (part number: **A06043**)
   - SeaTalk NG to stripped-end spur cable 3 m (9.8 ft) (part number: **A06044**)
5. ACU-200 / ACU-300 / ACU-400 / SPX-Series autopilot to SeaTalk NG spur cable 0.3 m (1.0 ft) (part number **R12112**). Connects the course computer to the SeaTalk NG backbone. This connection can also be used to provide 12 V dc power to the SeaTalk NG backbone.

SeaTalk NG backbone cables

SeaTalk NG backbone cables are used to create or extend a SeaTalk NG backbone.

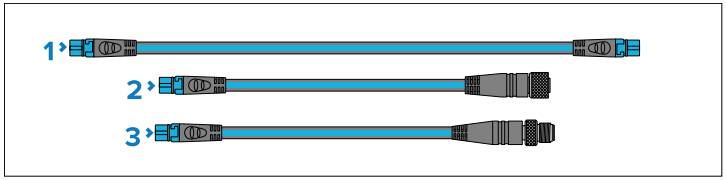

1. Backbone cables:
   - Backbone cable 0.4 m (1.3 ft) (part number: **A06033**).
   - Backbone cable 1 m (3.3 ft) (part number: **A06034**).
   - Backbone cable 3 m (9.8 ft) (part number: **A06035**).
   - Backbone cable 5 m (16.4 ft) (part number: **A06036**).
   - Backbone cable 9 m (29.5 ft) (part number: **A06068**).
   - Backbone cable 20 m (65.6 ft) (part number: **A06037**).
2. SeaTalk NG to DeviceNet (female) Backbone cable 0.4 m (1.3 ft) (part number: **A80675**)
3. SeaTalk NG to DeviceNet (male) Backbone cable 0.4 m (1.3 ft) (part number: **A80674**)

SeaTalk NG power cables

SeaTalk NG power cables are used to provide the SeaTalk NG backbone with a single 12 V dc power source. The power connection must include a 5 amp inline fuse (not supplied).

1. Power cable (straight) 2 m (6.6 ft) (part number: **A06049**).
2. Elbow (right-angled) power cable 2 m (6.6 ft) (part number: **A06070**).

SeaTalk NG connectors

SeaTalk NG connectors are used to connect SeaTalk NG devices to the SeaTalk NG backbone and to create and extend the backbone.

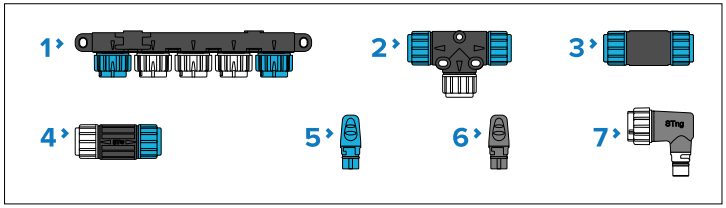

1. 5-Way connector (part number: **A06064**). Each connector block allows connection of up to 3 SeaTalk NG devices. Multiple connector blocks can be 'daisy chained' together.
2. T-piece (part number: **A06028**). Each T-piece allows connection of one SeaTalk NG device. Multiple T-pieces can be 'daisy chained' together.
3. Backbone extender (part number: **A06030**). Used to connect 2 backbone cables together.
4. Inline terminator (part number: **A80001**). Used to connect a spur cable and SeaTalk NG device at the end of a backbone instead of a backbone terminator.
5. Backbone terminator (part number: **A06031**). Terminators must be fitted to both ends of the SeaTalk NG backbone.
6. Spur blanking plug (part number: **A06032**). Used to cover unused spur connections in 5-Way blocks, T-piece connectors, or the SeaTalk 1 to SeaTalk NG converter.
7. Elbow (right-angled) spur connector (part number: **A06077**). Used in confined spaces where a straight spur cable will not fit.

SeaTalk NG adaptors and adaptor cables

SeaTalk NG adaptor cables are used to connect devices designed for different CAN Bus backbones (e.g.: SeaTalk 1 or DeviceNet) to the SeaTalk NG backbone.

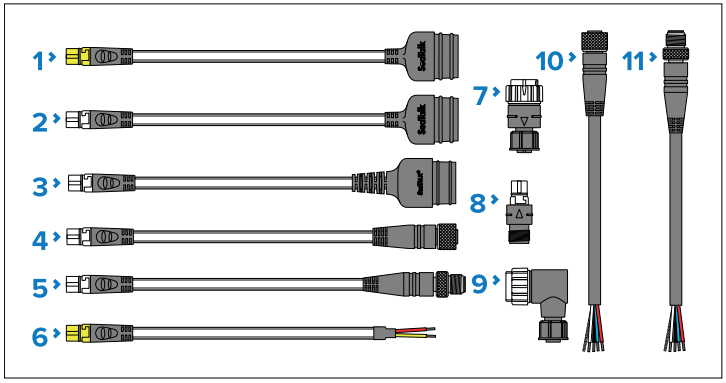

1. SeaTalk 1 (3 pin) to SeaTalk NG converter cable 1 m (3.3 ft) (part number: **A22164 / A06073**). Can be used to connect a SeaTalk 1 device to a SeaTalk NG backbone via the SeaTalk 1 to SeaTalk NG converter, or to connect a SeaTalk NG product directly to a SeaTalk 1 network.
2. SeaTalk 1 (3 pin) to SeaTalk NG adaptor cable 0.4 m (1.3 ft) (part number: **A06047**). Can be used to connect a SeaTalk 1 device to a SeaTalk NG backbone via the SeaTalk 1 to SeaTalk NG converter, or to connect a SeaTalk NG product directly to a SeaTalk 1 network.
3. SeaTalk 2 (5 pin) to SeaTalk NG adaptor cable 0.4 m (1.3 ft) (part number: **A06048**). Used to connect SeaTalk 2 devices or networks to a SeaTalk NG backbone.
4. SeaTalk NG to DeviceNet (female) adaptor cables connect NMEA 2000 devices that use a DeviceNet connector to the SeaTalk NG backbone, or connects SeaTalk NG devices to an NMEA 2000 network. The following cables are available:
   - SeaTalk NG to DeviceNet (female) adaptor cable 0.4 m (1.3 ft) (part number: **A06045**).
   - SeaTalk NG to DeviceNet (female) adaptor cable 1 m (3.3 ft) (part number: **A06075**).
5. SeaTalk NG to DeviceNet (male) adaptor cables. Connect NMEA 2000 devices that use a DeviceNet connector to the SeaTalk NG backbone, or connect SeaTalk NG devices to an NMEA 2000 network. The following cables are available:
   - SeaTalk NG to DeviceNet (male) adaptor cable 0.1 m (0.33 ft) (part number: **A06078**).
   - SeaTalk NG to DeviceNet (male) adaptor cable 0.4 m (1.3 ft) (part number: **A06074**).
   - SeaTalk NG to DeviceNet (male) adaptor cable 1 m (3.3 ft) (part number: **A06076**).
   - SeaTalk NG to DeviceNet (male) adaptor cable 1.5 m (4.92 ft) (part number: **A06046**).
6. NMEA 0183 stripped-end (2-wire) to SeaTalk NG adapter cable 1 m (3.3 ft) (part number: **A06071**). Used to connect an NMEA 0183 VHF radio to the SeaTalk NG backbone via the NMEA 0183 to SeaTalk NG converter.
7. SeaTalk NG (male) to DeviceNet (female) adaptor (**A06082***).
8. SeaTalk NG (female) to DeviceNet (male) adaptor (**A06083***).
9. SeaTalk NG (male) to DeviceNet (female) elbow (right-angled) adaptor (**A06084***).
10. DeviceNet (female) to stripped-end adaptor cable (0.4 m (1.3 ft)) (part number: **E05026**).
11. DeviceNet (male) to stripped-end adaptor cable (0.4 m (1.3 ft)) (part number: **E05027**).

Important:
* Do NOT connect the A06082, A06083, or A06084 adaptors directly to a backbone. Only connect as part of a **spur** connection between backbone and device.

Appendix A NMEA 0183 sentences

The radio supports the following NMEA 0183 sentences.

Sentence	Description	Ray53 / Ray63 Receive	Ray53 / Ray63 Transmit	Ray73 Receive	Ray73 Transmit
DSC	Digital Selective Calling		●		●
DSE	Expanded Digital Selective Calling		●		●
VDM	AIS VHF Data Link Message				●
GGA	Global Positioning System Fix Data	●		●	
GLL	Geographic Position — Lat/Long	●		●	
GNS	GNSS Fix Data	●		●	
RMA	Recommended Minimum Specific Loran-C Data	●		●	
RMC	Recommended Minimum Specific GNSS Data	●		●	
DTM	Datum	●		●	

Appendix B NMEA 2000 PGN list

The radio supports the following NMEA 2000 PGNs. These are applicable to NMEA 2000 and SeaTalk NG protocols.

Sentence	Description	Ray53 / Ray63 Receive	Ray53 / Ray63 Transmit	Ray73 Receive	Ray73 Transmit
59392	ISO Request	●	●	●	●
59904	ISO Acknowledgement	●	●	●	●
60416	Transport Protocol (group function BMA)	●		●	
60928	ISO Address Claim	●	●	●	●
65240	ISO Commanded Address		●		●
65396	AIS Transmitter Status				●
126208	NMEA® — Request Group Function	●		●	
126208	NMEA® — Command Group Function	●		●	
126208	NMEA® — Acknowledge Group Function		●		●
126464	PGN List		●		●
126992	System Time	●	●	●	●
126993	Heartbeat		●		●
126996	Product Information		●		●
127258	Magnetic variation	●		●	
129025	Position Rapid Update	●	●	●	●
129026	COG / SOG Rapid Update	●	●	●	●
129029	GNSS Position Data	●	●	●	●
129033	Local Time Offset	●	●	●	●
129038	AIS Class A Position Report				●
129039	AIS Class B Position Report				●
129040	AIS Class B Extended Position Report				●
129041	AIS Aids to Navigation (AtONs)				●
129044	Datum	●	●	●	●

Sentence	Description	Ray53 / Ray63 Receive	Ray53 / Ray63 Transmit	Ray73 Receive	Ray73 Transmit
129540	GNSS Satellites in View	●	●	●	●
129542	GNSS Pseudo Range Noise Statistics	●	●	●	●
129547	GNSS Pseudo Range Error Statistics	●	●	●	●
129793	AIS UTC and Date Report				●
129794	AIS Class A Static and Voyage Related data				●
129797	AIS Binary Broadcast		●		●
129798	AIS SAR Aircraft Position Report				●
129801	AIS Addressed Safety Related Message				●
129802	AIS Safety Related Broadcast Message				●
129808	DSC Call Information		●		●
129809	AIS Class B “CS” Static Data Report, Part A				●
129810	AIS Class B “CS” Static Data Report, Part B				●

Appendix C Licensing and MMSI issuing authorities

The following table lists the relevant issuing authority for licences and MMSI numbers in each region, along with a link to the relevant website. Many authorities allow you to apply for a license online.

Country & regulatory authority	Website
Argentina (AR): Ente Nacional de Comunicaciones	http://www.enacom.gob.ar
Australia (AU): Australian Communications and Media Authority	http://www.acma.gov.au/
Austria (AT): Austrian Regulatory Authority for Broadcasting and Telecommunications	http://www.rtr.at
Belgium (BE): Belgian Institute for Postal services and Telecommunications (BIPT)	http://www.bipt.be
Brazil (BR): Agencia Nacional de Telecomunicacoes	http://www.anatel.gov.br
Bulgaria (BG): Communications Regulation Commission	http://www.crc.bg
Canada (CA): Industry Canada	https://www.ic.gc.ca/eic/site/smt-gst.nsf/eng/home
China (ZH): Ministry of Information Industry	http://www.mii.gov.cn
Costa Rica (CR): Superintendencia de Telecomunicaciones	http://sutel.go.cr
Croatia (HR): Croatian Post and Electronic Communications Agency	http://www.hakom.hr/default.aspx?id=7
Cyprus (CY): Office of Electronic Communications & Postal Regulation	http://www.ocecpr.org.cy/nqcontent.cfm?a_id=767&tt=ocecpr&lang=gr
Czech Republic (CZ): The Czech Telecommunication Office	http://www.ctu.eu/main.php?pageid=178
Denmark (DK): Danish Energy Agency	https://ens.dk/en
Estonia (EE): Estonian Competition Authority	http://www.konkurentsiamet.e-e/?lang=en
Finland (FI): Finnish Communications Regulatory Authority	http://www.ficora.fi/en
France (FR): Autorité de Régulation des Communications Électroniques et des Postes	http://www.arcep.fr
Germany (DE): Bundesnetzagentur	http://www.bundesnetzagentur.de
Greece (EL): Hellenic Telecommunications and Post Commission	http://www.eett.gr/opencms/opencms/EETT_EN/index.html
Holland (NL): Autoriteit Consument & Markt	https://www.acm.nl/nl
Hong Kong (HK): Office of Communications Authority	http://www.ofca.gov.hk
Hungary (HU): National Media and Infocommunication Authority	http://www.nmhh.hu
Iceland (IS): Post and Telecom Administration	http://www.pfs.is/default.aspx?cat_id=101

Country & regulatory authority	Website
Indonesia (ID): Indonesian Telecommunications Regulatory Authority	http://www.brti.or.id
Ireland (IE): Commission for Communications Regulation	http://www.comreg.ie
Isle of Man (IM): Communications Commission	http://www.gov.im/government/boards/cc.xml
Italy (IT): Autorità per le Garanzie nelle Comunicazioni	http://www.agcom.it
Jamaica (JM): Spectrum Management Authority	http://www.sma.gov.jm
Japan (JP): Ministry of Internal Affairs and Communications	http://www.soumu.go.jp/english/index.html
Korea, South (KR): Korea Communications Commission	http://eng.kcc.go.kr
Lichtenstein (LI): Office for Communications	http://www.llv.li/amtsstellen/llv-ak-english-page.htm
Lithuania (LT): Communications Regulatory Authority	http://www.rrt.lt/en/home.html
Luxembourg (LU): Institut luxembourgeois de régulation	http://www.ilr.public.lu
Latvia (LV): Elektronisko sakaru direkcija	https://www.vases.lv/lv/content/juras-sakaru-atlaujas
Malaysia (MY): Malaysian Communications and Multimedia Commission	http://www.mcmc.gov.my

Country & regulatory authority	Website
Malta (MT): Malta Communications Authority	http://www.mca.org.mt
Mexico (MX): Instituto Federal de Telecomunicaciones	http://www.ift.org.mx
New Zealand (NZ): Commerce Commission of New Zealand	http://www.comcom.govt.nz
Norway (NO): Norwegian Communications Authority	http://www.nkom.no
Panama (PA): Autoridad Nacional de los Servicios Públicos	http://www.asep.gob.pa/default.asp
Poland (PL): Prezes Urzędu Komunikacji Elektronicznej	http://www.uke.gov.pl
Portugal (PT): Autoridade Nacional de Comunicações	https://www.anacom.pt
Romania (RO): National Authority for Management and Regulation in Communications of Romania	http://www.ancom.org.ro/en
Russia (RU): Ministry of Telecom and Mass Communications of the Russian Federation	https://minsvyaz.ru/en
Saudi Arabia (SA): Communications and Information Technology Commission (Saudi Arabia)	http://www.citc.gov.sa

Country & regulatory authority	Website
Singapore (SG): Info-communications Media Development Authority of Singapore	https://www.imda.gov.sg
Slovenia (SI): Agency for communication networks and services of the Republic of Slovenia	http://www.akos-rs.si/akos-ang
Slovakia (SK): Telecommunications Regulatory Authority of the Slovak Republic	http://www.teleoff.gov.sk/index.php?ID=9
South Africa (ZA): Independent Communications Authority of South Africa	http://www.icasa.org.za
Spain (ES): Comisión Nacional de los Mercados y la Competencia	https://www.cnmc.es/en
Sweden (SE): Swedish Post and Telecom Authority	http://www.pts.se
Switzerland (CH): Office fédéral de la communication	http://www.bakom.admin.ch/themen/frequenzen/00689/01563/index.html?lang=fr
Taiwan (TW): National Communications Commission	http://www.ncc.gov.tw/english/index.aspx
Thailand (TH): National Broadcasting and Telecommunications Commission	http://nbtc.go.th/wps/portal/NTC/eng
Turkey (TR): Information And Communication Technologies Authority	http://eng.btk.gov.tr

Country & regulatory authority	Website
United Arab Emirates (AE): Telecommunications Regulatory Authority	http://www.tra.ae
United Kingdom and Northern Ireland (UK (NI)): OFCOM	http://www.ofcom.org.uk
United States (US): FCC	https://www.fcc.gov/bureau-divisions/mobility-division/ship-radio-stations#block-menu-block-4

Appendix D VHF Channels

International Marine VHF Channels and Frequencies

CH No.	TX Freq	RX Freq (MHz)	Single Freq (MHz)	Use
01	156.050	160.650		Public correspondence, Port operations and Ship movement.
02	156.100	160.700		Public correspondence, Port operations and Ship movement.
03	156.150	160.750		Public correspondence, Port operations and Ship movement.
04	156.200	156.800		Public correspondence, Port operations and Ship movement.
05	156.250	156.850		Public correspondence, Port operations and Ship movement.
06	156.300	156.300	x	Intership. Coordinated search and rescue and ship stations working frequency
07	156.350	160.950		Public correspondence, Port operations and Ship movement.
08	156.400	156.400	x	Intership. Preferred intership channel
09	156.450	156.450	x	Intership, Port operations and Ship movement.
10	156.500	156.500	x	Intership, Port operations and Ship movement. SAR, Pollution incidents, MSI broadcasts coordinated with HMCG.
11	156.550	156.550	x	Port operations and Ship movement.
12	156.600	156.600	x	Port operations and Ship movement.
13	156.650	156.650	x	Intership navigation safety (Bridge-to-bridge). International navigation safety channel. May also be used for ship movement, port operations and limited coast stations.
14	156.700	156.700	x	Port operations and Ship movement.
15	156.750	156.750	x	On-board communications. 1 watt maximum power.
16	156.800	156.800	x	International Distress, Safety and Calling.
17	156.850	156.850	x	On–board communications. 1 watt maximum power.
18	156.900	161.500		Public correspondence, Port operations and Ship movement.
19	156.950	161.550		Public correspondence, Port operations and Ship movement.

CH No.	TX Freq	RX Freq (MHz)	Single Freq (MHz)	Use
1019	156.950	156.950	x	Port operations and Ship movement.
2019	161.550	161.550	x	Port operations and Ship movement. Channel is limited to coast stations only unless otherwise permitted by UK regulation.
20	157.000	161.600		Public correspondence, Port operations and Ship movement.
1020	157.000	157.000	x	Public correspondence, Port operations and Ship movement.
2020	161.600	161.600	x	Public correspondence, Port operations and Ship movement. Channel is limited to coast stations only unless otherwise permitted by UK regulation.
21	157.050	161.650		Public correspondence, Port operations and Ship movement. Available for VDSMS
22	157.100	161.700		Public correspondence, Port operations and Ship movement. Available for VDSMS
23	157.150	161.750		Safety. HNCG — SAR and MSI broadcasts.
24	157.200	161.800		Public correspondence, Port operations and Ship movement. Available for VDSMS
1024	157.200	157.200	x	For future use
2024	161.800	161.800	x	For future use
25	157.250	161.850		Public correspondence, Port operations and Ship movement. Available for VDSMS
1025	157.250	157.250	x	For future use
2025	161.850	161.850	x	For future use
26	157.300	161.900		Public correspondence, Port operations and Ship movement. Available for VDSMS
1026	157.300	157.300	x	For future use
2026	161.900	161.900	x	For future use
27	157.350	161.950		Public correspondence, Port operations and Ship movement. Available for testing of new AIS applications.
1027	157.350	157.350	x	Port operations and Ship movement.

CH No.	TX Freq	RX Freq (MHz)	Single Freq (MHz)	Use
2027	161.950	161.950	x	Application specific message (ASM1)
28	157.400	162.000		Public correspondence, Port operations and Ship movement. Available for testing of new AIS applications.
1028	157.400	157.400	x	Port operations and Ship movement.
2028	162.00	162.00	x	Application specific message (ASM2)
60	156.025	160.625		Public correspondence, Port operations and Ship movement.
61	156.075	160.675		Public correspondence, Port operations and Ship movement.
62	156.125	160.725		Public correspondence, Port operations and Ship movement.
63	156.175	160.775		Public correspondence, Port operations and Ship movement.
64	156.225	160.825		Public correspondence, Port operations and Ship movement.
65	156.275	160.875		UK National Coastwatch.
66	156.325	160.925		Public correspondence, Port operations and Ship movement.
67	156.375	156.375	x	Intership, Port operations and Ship movement. HMCG — SAR and Safety.
68	156.425	156.425	x	Port operations and Ship movement.
69	156.475	156.475	x	Intership, Port operations and Ship movement.
71	156.575	156.575	x	Port operations and Ship movement.
72	156.625	156.625	x	Intership. Preferred intership channel.
73	156.675	156.675	x	Intership, Port operations and Ship movement. HMCG — SAR and MSI broadcasts.
74	156.725	156.725	x	Port operations and Ship movement.
75	156.775	156.775	x	Intership Navigation related communications only with 1 watt maximum power.
76	156.825	156.825	x	Intership Navigation related communications only with 1 watt maximum power.
77	156.875	156.875	x	Intership. Preferred intership channel.

CH No.	TX Freq	RX Freq (MHz)	Single Freq (MHz)	Use
78	156.925	161.525		Public correspondence, Port operations and Ship movement.
1078	156.925	156.925	x	Port operations and Ship movement.
2078	161.525	161.525	x	Port operations and Ship movement. Channel is limited to coast stations only unless otherwise permitted by UK regulation.
79	156.975	161.575		Public correspondence, Port operations and Ship movement.
1079	156.975	156.975	x	Port operations and Ship movement.
2079	161.575	161.575	x	Port operations and Ship movement. Channel is limited to coast stations only unless otherwise permitted by UK regulation.
80	157.025	161.625		Public correspondence, Port operations and Ship movement. Also marinas and yacht clubs UK only. Available for VDSMS.
81	157.075	161.675		Public correspondence, Port operations and Ship movement. Available for VDSMS
82	157.125	161.725		Public correspondence, Port operations and Ship movement. Available for VDSMS
83	157.175	161.775		Public correspondence, Port operations and Ship movement. Available for VDSMS
84	157.225	161.825		Port operations and Ship movement. HMCG — SAR and MSI broadcasts.
1084	157.225	157.225	x	For future use
2084	161.825	161.825	x	For future use
85	157.275	161.875		Public correspondence, Port operations and Ship movement. Available for VDSMS
1085	157.275	157.275	x	For future use
2085	161.875	161.875	x	For future use
86	157.325	161.925		Port operations and Ship movement. HMCG — SAR and MSI broadcasts.
1086	157.325	157.325	x	For future use
2086	161.925	161.925	x	For future use

CH No.	TX Freq	RX Freq (MHz)	Single Freq (MHz)	Use
87	157.375	157.375	x	Port operations and Ship movement. Available for testing of new AIS applications.
88	157.425	157.425	x	Port operations and Ship movement. Available for testing of new AIS applications.

Please be aware that:

- Intership channels are for communications between ship stations. Intership communications should be restricted to channels 6, 8, 72 and 77. If these are not available, the other channels marked for Intership may be used.
- Channel 70 is used exclusively for Digital Selective Calling (DSC) and is not available for regular voice communications.

Note:

1. Channel 06 may also be used for communications between ship stations and aircraft engaged in coordinated search and rescue operations. Ship stations should avoid harmful interference to such communications on channel 06 as well as to communications between aircraft stations, ice breakers and assisted ships during ice seasons.
2. Within the European Maritime Area and in Canada, channels 10, 67 and 73 may also be used by the individual administrations concerned for communication between ship stations, aircraft stations and participating land stations engaged in coordinated search and rescue and anti-pollution operations in local areas. Channel 10 or 73 (depending on location) are also used for the broadcast of Marine Safety Information by the Maritime and Coast Guard Agency in the UK only.
3. Channel 13 is designated for use on a worldwide basis as a navigation safety communication channel, primarily for intership navigation safety communications.
4. Channels 15 and 17 may also be used for on-board communications provided the effective radiated power does not exceed 1 Watt.
5. The use of channels 75 and 76 should be restricted to navigation related communications only and all precautions should be taken to avoid harmful interference to channel 16. Transmit power is limited to 1 Watt.

Private Channels (Europe only)

Country	Channel Designations	TX Freq	RX Freq	Channel Use
Belgium	96	162.425	162.425	Marina
Denmark	L1	155.500	155.500	Pleasure
Denmark	L2	155.525	155.525	Pleasure
Finland, Norway & Sweden	L1	155.500	155.500	Pleasure

Country	Channel Designations	TX Freq	RX Freq	Channel Use
Finland, Norway & Sweden	L2	155.525	155.525	Pleasure
Finland, Norway & Sweden	L3	155.650	155.650	Pleasure
Holland (Netherlands)	31	157.550	162.150	Marina
Holland (Netherlands)	37	157.850	157.850	Leisure
Denmark, Finland, Norway & Sweden	F1	155.625	155.625	Fishing
Denmark, Finland, Norway & Sweden	F2	155.775	155.775	Fishing
Denmark, Finland, Norway & Sweden	F3	155.825	155.825	Fishing
United Kingdom	M1	157.850	157.850	Marina
United Kingdom	M2	161.425	161.425	Marina

The national channels listed above have been allocated for the specific use within the countries listed. To use these channels you must have the appropriate license.

US Marine VHF Channels and Frequencies

Note:
Some of the channel numbers have recently changed. For completeness, both old and new numbers are shown in the table below.

(New) CH No.	(Old) CH No.	TX Freq (MHz)	RX Freq (MHz)	Single Freq	Use
1001	01A	156.050	156.050	x	Port operations and commercial, VTS. Available only in New Orleans / Lower Mississippi area.
1005	05A	156.250	156.250	x	Port operations or VTS in the Houston, New Orleans and Seattle areas.
06	06	156.300	156.300	x	Intership Safety.
1007	07A	156.350	156.350	x	Commercial. VDSMS.

(New) CH No.	(Old) CH No.	TX Freq (MHz)	RX Freq (MHz)	Single Freq	Use
08	08	156.400	156.400	x	Commercial (Intership only). VDSMS.
09	09	156.450	156.450	x	Boater calling. Commercial and Non-commercial. VDSMS.
10	10	156.500	156.500	x	Commercial. VDSMS.
11	11	156.550	156.550	x	Commercial. VTS in selected areas. VDSMS.
12	12	156.600	156.600	x	Port operations. VTS in selected areas.
13	13	156.650	156.650	x	Intership navigation safety (Bridge-to-bridge). Ships >20 metres in length maintain a listening watch on this channel in US waters.
14	14	156.700	156.700	x	Port operations. VTS in selected areas.
15	15	-	156.750	x	Environmental (Receive only). Used by Class ‘C’ EPIRBs.
16	16	156.800	156.800	x	International Distress, Safety and Calling. Ships required to carry radio, USCG, and most coast stations maintain a listening watch on this channel.
17	17	156.850	156.850	x	State Control.
1018	18A	156.900	156.900	x	Commercial. VDSMS.
1019	19A	156.950	156.950	x	Commercial. VDSMS.
20	20	157.000	161.600		Port operations (duplex).
1020	20A	157.000	157.000	x	Port operations.
1021	21A	157.050	157.050	x	US Coast Guard only.
1022	22A	157.100	157.100	x	Coast Guard Liaison and Maritime Safety Information Broadcasts. Broadcasts announced on channel 16.

(New) CH No.	(Old) CH No.	TX Freq (MHz)	RX Freq (MHz)	Single Freq	Use
1023	23A	157.150	157.150	x	US Coast Guard only.
24	24	157.200	161.800		Public correspondence (Marine operator).
25	25	157.250	161.850		Public correspondence (Marine operator).
26	26	157.300	161.900		Public correspondence (Marine operator).
27	27	157.350	161.950		Public correspondence (Marine operator).
28	28	157.400	162.000		Public correspondence (Marine operator).
1063	63A	156.175	156.175	x	Port operations and commercial VTS, Available only in New Orleans / Lower Mississippi area.
1065	65A	156.275	156.275	x	Port operations.
1066	66A	156.325	156.325	x	Port operations.
67	67	156.375	156.375	x	Commercial. Used for bridge-to-bridge communications in lower Mississippi river (Intership only).
68	68	156.425	156.425	x	Non-commercial. VDSMS.
69	69	156.475	156.475	x	Non-commercial. VDSMS.
71	71	156.575	156.575	x	Non-commercial. VDSMS.
72	72	156.625	156.625	x	Non-commercial (Intership only). VDSMS.
73	73	156.675	156.675	x	Port operations.
74	74	156.725	156.725	x	Port operations.
77	77	156.875	156.875	x	Port operations (Intership only).
1078	78A	156.925	156.925	x	Non-commercial. VDSMS.
1079	79A	156.975	156.975	x	Commercial. Non-commercial in Great Lakes only). VDSMS.

(New) CH No.	(Old) CH No.	TX Freq (MHz)	RX Freq (MHz)	Single Freq	Use
1080	80A	157.025	157.025	x	Commercial. Non-commercial in Great Lakes only). VDSMS.
1081	81A	157.075	157.075	x	US Government only — Environmental protection operations.
1082	82A	157.125	157.125	x	US Government only.
1083	83A	157.175	157.175	x	US Coast Guard only.
84	84	157.225	161.825		Public correspondence (Marine operator). VDSMS.
85	85	157.275	161.875		Public correspondence (Marine operator). VDSMS.
86	86	157.325	161.925		Public correspondence (Marine operator). VDSMS.
87	87	157.375	161.975		Public correspondence (Marine operator). VDSMS.
88	88	157.425	157.425		Commercial, Intership only. VDSMS.

Please be aware that:

- Recreational boaters normally use channels listed as Non-commercial: 68, 69, 71, 72 1078.
- Channel 70 is used exclusively for DSC and is not available for regular voice communications.
- Channels 75 and 76 are reserved as guards bands for channel 16 and are not available for regular voice communications.

Note:

1. Four digit channels indicate simplex use of the ship station transmit side of an international semi-duplex channel. Operations are different from that of international operations on that channel.
2. Channel 13 should be used to contact a ship when there is danger of collision. All ships of length 20 metres or greater are required to guard VHF channel 13, in addition to VHF channel 16, when operating within US territorial waters.
3. Channel 15 is receive only.
4. Channel 16 is used for calling other stations or for distress calls.
5. Channel 17 and channel 77 have a fixed power output of 1 watt.
6. Channel 13 and channel 67 have an initial power output of 1 watt. User can temporarily override this restrictions to transmit at high power.
7. VDSMS (VHF Digital Small Message Services). Transmissions of short digital messages in accordance with RTCM Standard 12301.1 is allowed.

WX Channels (North America only)

Weather Channel	Frequency in MHz
WX1	162.550
WX2	162.400
WX3	162.475
WX4	162.425
WX5	162.450
WX6	162.500
WX7	162.525
WX8	161.650
WX9	161.775
WX10	163.275

Canadian Marine VHF Channels and Frequencies

Note:
Some of the channel numbers have recently changed. For completeness, both old and new numbers are shown in the table below.

(New) CH No.	(Old) CH No.	TX Freq (MHz)	RX Freq (MHz)	Single Freq	Areas of operation	Use
01	01	156.050	160.650		BCC	Public correspondence.
02	02	156.100	160.700		BCC	Public correspondence.
03	03	156.150	160.750		BCC	Public correspondence.
1004	04A	156.200	156.200	x	BCC, EC	Intership, Ship/Shore, Commercial and Safety DFO / Canadian Coast Guard only in BCC area. Commercial fishing in EC area.
1005	05A	156.250	156.250	x	AC, BCC, EC, GL, NL, INLD BC, WC	Ship movement.
06	06	156.300	156.300	x	All areas	Intership, Commercial, Non-Commercial and Safety Maybe used for search and rescue communications between ships and aircraft.
1007	07A	156.350	156.350	x	AC, BCC, EC, GL, NL, INLD BC, WC	Intership, Ship/Shore and Commercial.
08	08	156.400	156.400	x	EC, INLD BC, WC	Intership, Commercial and Safety. Also assigned for Intership in the Lake Winnipeg area.
09	09	156.450	156.450	x	AC, INLD PRA, BCC	Intership, Ship/Shore, Commercial, Non-commercial, Safety and Ship movement. Commercial — BCC area. May be used to communicate with aircraft and helicopters in predominantly maritime support operations.
10	10	156.500	156.500	x	AC, BCC, GL	Intership, Ship/Shore, Commercial, Non-commercial, Safety and Ship movement. Commercial — BCC area. May also be used for communications with aircraft engaged in coordinated search and rescue and antipollution operations.
11	11	156.550	156.550	x	AC, BCC, GL	Intership, Ship/Shore, Commercial, Non-commercial and Ship movement. VTS — BCC area. Also used for pilotage purposes.

(New) CH No.	(Old) CH No.	TX Freq (MHz)	RX Freq (MHz)	Single Freq	Areas of operation	Use
12	12	156.600	156.600	x	AC, BCC, GL, WC	Intership, Ship/Shore, Commercial, Non-commercial and Ship movement. VTS — BCC area. Port operations and pilot information and messages.
13	13	156.650	156.650	x	AC, BCC, EC, GL, NL, INLD BC, WC	Intership, Commercial, Non-commercial and Ship movement. VTS — BCC area. Bridge-to-bridge navigational traffic.
14	14	156.700	156.700	x	AC, BCC, GL	Intership, Ship/Shore, Commercial, Non-commercial and Ship movement. VTS — BCC area. Port operations and pilot information and messages.
15	15	156.750	156.750	x	AC, BCC, EC, GL, NL, INLD BC, WC	Intership, Ship/Shore, Commercial, Non-commercial and Ship movement. Port operations and Ship movement — BCC area. All operations limited to 1 watt maximum power. May also be used for on-board communications.
16	16	156.800	156.800	x	All areas	International distress, safety and calling.
17	17	156.850	156.850	x	AC, BCC, EC, GL, NL, INLD BC, WC	Intership, Ship/Shore, Commercial, Non-commercial and Ship movement. Port operaitons and Ship movement — BCC area. All operations limited to 1 watt maximum power. May also be used for on-board communications.
1018	18A	156.900	156.900	x	AC, BCC, EC, GL, NL, INLD BC, WC	Intership, Ship/Shore and Commercial. Towing — BCC area.
1019	19A	156.950	156.950	x	All areas	Intership and Ship/Shore. DFO / Canadian Coast Guard. Pacific Pilots — BCC area.
20	20	157.00	161.600		AC, BCC, EC, GL, NL, INLD BC, WC	Ship/Shore, Safety and Ship movement. Port operations only with 1 watt maximum power.
1021	21A	157.050	157.050	x	All areas	Intership and Ship/Shore. DFO / Canadian Coast Guard only.

(New) CH No.	(Old) CH No.	TX Freq (MHz)	RX Freq (MHz)	Single Freq	Areas of operation	Use
2021	21B	-	161.650	x	All areas	Safety Continuous Marine Broadcast (CMB) service.
1022	22A	157.100	157.100	x	All areas	Intership, Ship/Shore, Commercial and Non-commercial. For communications between Canadian Coast Guard and non-Canadian Coast Guard stations only.
23	23	157.150	161.750		BCC, INLD BC	Ship/Shore and Public correspondence.
2023	-	-	161.750	x	GL	Safety Continuous Marine Broadcast (CMB) service.
24	24	157.200	161.800		All areas	Ship/Shore and Public correspondence.
25	25	157.250	161.850		BCC	Ship/Shore and Public correspondence.
2025	25B	-	161.850	x	AC	Safety Continuous Marine Broadcast (CMB) service.
26	26	157.300	161.900		All areas	Safety and Public correspondence.
27	27	157.350	161.950		AC, BCC, GL	Ship/Shore and Public correspondence.
28	28	157.400	162.00		BCC	Ship/Shore, Safety and Public correspondence.
2028	28B	-	162.000	x	AC, GL	Safety Continuous Marine Broadcast (CMB) service.
60	60	156.025	160.625		BCC	Ship/Shore and Public correspondence.
1061	61A	156.075	156.075	x	BCC	Intership, Ship/Shore and Commercial DFO / Canadian Coast Guard only in BCC area. Commercial fishing only in EC area.
1062	62A	156.125	156.125	x	BCC, EC	Intership, Ship/Shore and Commercial DFO / Canadian Coast Guard only in BCC area. Commercial fishing only in EC area.
1063		156.175	156.175	x	BCC	Intership, Ship/Shore and Commercial. Tow boats — BCC area.
64	64	156.225	160.825		BCC	Ship/Shore and Public correspondence.
1064	64A	156.225	156.225	x	EC	Intership, Ship/Shore and Commercial Commercial fishing only.

(New) CH No.	(Old) CH No.	TX Freq (MHz)	RX Freq (MHz)	Single Freq	Areas of operation	Use
1065	65A	156.275	156.275	x	All areas	Inership, Ship/Shore, Safety, Commercial and Non-commercial. Search and rescue and antipollution operations on the Great Lakes. Towing on the Pacific coast. Port operations only in the St. Lawrence river area with 1 watt maximum power. Intership in INLD PRA area.
1066	66A	156.325	156.325	x	AC, BCC, EC, GL, NL, INLD BC, WC	Intership, Ship/Shore, Safety, Commercial and Non-commercial. Port operations only in the St. Lawrence river / Great Lakes areas with 1 watt maximum power. 1 watt marine channel in BCC area.
67	67	156.375	156.375	x	All areas	Intership Ship/Shore, Safety, Commercial and Non-commercial. May also be used for communications with aircraft engaged in coordinated search and rescue and antipollution operations. Commercial fishing only in EC and INLD PRA areas. Pleasure craft — BCC area.
68	68	156.425	156.425	x	All areas	Intership, Ship/Shore and Non-commercial. For marinas, yacht clubs and pleasure craft.
69	69	156.475	156.475	x	AC, BCC, EC, GL, NL, INLD BC, WC	Intership, Ship/Shore, Commercial and Non-commercial. Commercial fishing only — EC area. Pleasure craft — BCC area.
71	71	156.575	156.575	x	AC, BCC, EC, GL, NL, INLD BC, WC	Intership, Ship/Shore, Safety, Commercial,, Non-commercial and Ship movement. Ship movement — BCC area. Marinas and yacht clubs — EC area and on Lake Winnipeg.
72	72	156.625	156.625	x	BCC, EC	Intership, Commercial and Non-commercial May be used to communicate with aircraft and helicopters in predominantly maritime support operations. Pleasure craft — BCC area.

(New) CH No.	(Old) CH No.	TX Freq (MHz)	RX Freq (MHz)	Single Freq	Areas of operation	Use
73	73	156.675	156.675	x	All areas	Intership, Ship/Shore, Safety, Commercial and Non-commercial. May also be used for communications with aircraft engaged in coordinated search and rescue and antipollution operations. Commercial fishing only in EC and INLD PRA areas.
74	74	156.725	156.725	x	BCC, EC	Intership, Ship/Shore, Commercial, Non-commercial and Ship movement. VTS and Ship movement — BCC area.
75		156.775	156.775	x	All areas	Intership, Ship/Shore, Commercial and Ship movement. Simplex port operation, ship movement and navigation related communication only. 1 watt maximum power.
76		156.825	156.825	x	All areas	Intership, Ship/Shore, Commercial and Ship movement. Simplex port operation, ship movement and navigation related communication only. 1 watt maximum power.
77	77	156.875	156.875	x	AC, BCC, EC, GL, NL, INLD BC, WC	Intership, Ship/Shore, Safety and Ship movement. Pilotage BCC area, 25 watts. Port operations only in the St. Lawrence River/Great Lakes areas with 1 watt maximum power.
1078	78A	156.925	156.925	x	BCC, EC	Intership, Ship/Shore and Commercial. Fishing industry — BCC area.
1079	79A	156.975	156.975	x	BCC, EC	Intership, Ship/Shore and Commercial. Fishing industry — BCC area.
1080	80A	157.025	157.025	x	BCC, EC	Intership, Ship/Shore and Non-commercial. Whale watching — BCC area.
1081	81A	157.075	157.075	x	AC, BCC, EC, GL, NL, INLD BC, WC	Intership, Ship/Shore and Safety. DFO / Canadian Coast Guard use only.
1082	82A	157.125	157.125	x	AC, BCC, EC, GL, NL, INLD BC, WC	Intership and Ship/Shore. DFO / Canadian Coast Guard use only.

(New) CH No.	(Old) CH No.	TX Freq (MHz)	RX Freq (MHz)	Single Freq	Areas of operation	Use
1083	83A	157.175	157.175	x	BCC, EC	Intership and Ship/Shore DFO / Canadian Coast Guard and other government agencies.
2083	83B	-	161.775	x	AC, BCC, GL	Safety Continuous Marine Broadcast (CMB) service.
84	84	157.225	161.825		BCC	Ship/Shore and Public correspondence.
85	85	157.275	161.875		AC, BCC, GL ,NL	Ship/Shore and Public correspondence.
86	86	157.325	161.925		BCC	Ship/Shore and Public correspondence.
87	87	157.375	157.375	x	AC, BCC, GL, NL	Intership, Non-commercial and Ship movement. Port operation and ship movement — EC area. Pleasure craft — BCC area.
88	88	157.425	157.425	x	AC, BCC, GL, NL	Intership, Commercial and Ship movement. Port operation and ship movement — BCC area.

Area of operation:

- **AC** — Atlantic Coast, Gulf and St. Lawrence River up to and including Montreal.
- **BCC** — British Columbia Coast (Pacific Coast).
- **EC** — East Coast: includes NL, AC, GL and Eastern Arctic areas.
- **GL** — Great Lakes: includes St. Lawrence above Montreal.
- **NL** — Newfoundland and Labrador.
- **WC** — West Coast: includes BCC, Western Arctic and Athabasca-Mackenzie Watershed areas.
- **INLD BC** — Inland waters of BC and the Yukon
- **INLD PRA** — Inland waters of MB, SK and AB

Note:

1. Four digit channels indicate simplex use of the ship station transmit side of an international semi-duplex channel. Operations are different from that of international operations on that channel.
2. Channel 16 is used for calling other stations or for distress calls.
3. Channel 70 is used exclusively for Digital Selective Calling and is not available for regular voice communications.

Appendix E Phonetic alphabet

To help make call letters more clearly understood, and to assist in spelling out similar sounding or unfamiliar word, radiotelephone users employ the international phonetic alphabet.

Letter	Word
A	ALPHA
B	BRAVO
C	CHARLIE
D	DELTA
E	ECHO
F	FOXTROT
G	GOLF
H	HOTEL
I	INDIA
J	JULIET
K	KILO
L	LIMA
M	MIKE
N	NOVEMBER
O	OSCAR
P	PAPA
Q	QUEBEC
R	ROMEO
S	SIERRA
T	TANGO
U	UNIFORM
V	VICTOR
W	WHISKEY
X	X-RAY
Y	YANKEE
Z	ZULU

Appendix F Prowords

Prowords can be used to simplify and speed up radio communications.

Proword	Meaning
ACKNOWLEDGE	Have you received and understood?
CONFIRM	Is that correct?
CORRECTION	An error has been made?
I SAY AGAIN	I repeat (e.g. important information).
I SPELL	Phonetically spelling of the word.
OUT	End of communication.
OVER	I have completed this part of the message and am inviting you to reply.
RECEIVED	Receipt acknowledgement.
SAY AGAIN	Repeat your message.
STATION CALLING	Used when a station is uncertain of the identity of a station which is calling.

Index

A

Accessories 149
  SeaTalk NG adaptor cables 153
  SeaTalk NG backbone cables 152
  SeaTalk NG cables 150
  SeaTalk NG connectors 152
  SeaTalk NG kits 150
  SeaTalk NG Power cables 152
  SeaTalk NG spur cables 151
  Wired 149
  Wireless 149
Additional components
  Optional 21
  Required 21
AIS receiver 116
Applicable products 17
ATIS
  Enabling/Disabling 92, 116
ATIS ID 31, 91

B

Backlight adjustment 87
Bracket mounting 52
Brightness 87
  Adjustment 87
  Shared 87

C

Cable
  Bend radius 48
  Protection 48–49
  Routing 48
  Security 48
  Strain relief 48
Cable routing 41
Cabling
  Circuit isolation 48
Call log 110
  Details 110
  Types 110
Checking password 97
Circuit isolation 48
Cleaning 123
Compass safe distance 42
Compatible MFDs / Chartplotters 22
Connections 75
  Bare-ended wires 49
  Battery 77
  DeviceNet 71
  Distribution panel 76
  Fistmic (Front) 65
  Fistmic (Rear) 66
  Loud hailer 73
  NMEA 0183 69
  NMEA 2000 71
  Passive speaker 65
  Power 75
  Primary station 50, 64
  Ray53 ..... 49, 63
  Ray63 ..... 50, 63
  Ray73 ..... 50, 63
  Raymic handset 66
  SeaTalk NG 71
  Secondary station 50, 64, 66
  VHF antenna 64
  Wire 49
  Wireless handset 67
  Wireless hub 96
  Wireless speaker 78, 98
Contrast adjustment 87
Controls
  Base station 81
  Fistmic 82
  Raymic 82
  Wired handset 82
  Wireless handset 82

D

Declaration of Conformity 14
Diagnostics 134

Wireless speaker 135
Digital Selective Calling, *See* DSC
Dimensions
Active speaker 38
Fistmic 37
Passive speaker 38
Ray53 36
Ray63 36
Ray73 36
Raymic 38
Wired handset 38
Wireless hub 39
Display set-up 118
Distress call 102–103
Cancelling 104
Documentation
Product 18
Drilling
Product holes 53, 55
DSC set-up 111

E

Electromagnetic Compatibility 42
EMC 42

F

Front bezel
Attaching 56
Fuse rating 75
Wireless speaker 78–79

G

GNSS
Antenna 21
Displayed data 94
Enabling/Disabling 93
Integrated 93
Internal 93
No position data 93
Position information 94
set-up 93
GPS, *See* GNSS
Group call 108
Making 108
Receiving 108

H

Handset
Power 83
Homescreen 84

I

Individual call 102
Making 108
Reason codes 107
Receiving 108
Installation
Best practice 77
EMC guidelines 42
multiple antennas 44, 125
surface requirements 41
Ventilation 41
VHF antenna requirements 44
Intercom 121
Interference 42
See also Compass safe distance
Electrical 42
RF 42

L

LED
Wireless speaker 135
Licensing
Europe requirement 27
ISED (Canada) requirement 27
Issuing authorities 158
Requirement 14, 26, 81
Rest of World requirement 29

USA Requirement 26
Location requirements
GNSS 43–44
GPS 43–44
Wireless 44–45
Wireless interference 45
Loud hailer 120
location requirements 44

M

Maintenance 123
Making designated call 103
Manual position 94
Mayday call 103
Menus
Display set-up 118
DSC set-up 111
Fog 120
Hailer 120
Intercom 120
Main menu 85
Set-up 116
Wireless set-up 99
MFD
Compatibility 22
MMSI 31, 130
Issuing authorities 158
MMSI number 90
Mounting 54–55
Bracket 52
Fistmic 57
Handset 57
Hole covers 53
Hook plate 57
Options 52
Pass-through panel kit 58
Product holes 53, 55
Raymic 57
Wired handset 57
Wired speaker 58
Wireless handset 61
Wireless hub 59
Wireless speaker 58
MPE 44

N

Network
Selection 89
NMEA
Settings
Baud rate 89
NMEA 0183
Sentences (PGNs) 155
NMEA 2000
PGNs 156

P

Panel mounting 54–55
Parts supplied
Ray53 33
Ray63 33
Ray73 33
Phonebook 109
Adding entry 109
Delete entry 110
Updating entry 110
Position request 109
Automatic response 109
Making 109
Responding 109
Power 75
Battery connection 77
Connection to battery 77
Connection to distribution panel 76
Distribution 75
Distribution panel 76
Grounding 75
Sharing a breaker 76
Power cable extension 77
Printed manual 18
Product
overview 21

Product documentation 18
SeaTalk NG documentation 18
Product recycling (WEEE) 15
Product support 137

R

Radio Frequency (RF) interference 42
Routine call, *See* Individual call
Routine checks 123

S

Safety call 102
Making 107
Receiving 107
Scan mode 114
Setting 114
SeaTalk NG 71
Adaptor cables 153
Backbone cables 152
Connectors 152
Kits 150
Power cables 152
Spur cables 151
SeaTalk NG cables 150
Service Center 137
Servicing 123
Set-up menu 116
Shared brightness 87
Shared Brightness 87
Software update 23
Software updates 23, 45
Software version 17, 23
Spares 149
Station priority 94
Status bar 84
Support forum 138
Suppression ferrites 43
See also EMC
Switching power output 93

T

Technical specification
Ray53
Environmental specification 140
GNSS (GPS) specification 141
Power specification 140
Receiver specification 140
Speaker specification 141
Transmitter specification 140
Ray60 141
Ray63
Environmental specification 141
GNSS (GPS) specification 143
Power specification 142
Receiver specification 142
Speaker specification 142
Transmitter specification 142
Ray73 143
AIS specification 144
Environmental specification 143
GPS specification 145
Power specification 143
Receiver specification 144
Speaker specification 144
Transmitter specification 144
Wired (Passive) speaker 145
Wired handset (Raymic) 145
Wireless (Active) speaker
Connections 147
Environmental specification 147
Power specification 147
Wireless handset 146
Battery specification 146
Wireless handset charging holster
Environmental specification 147
Power specification 146
Wireless hub 146
Technical support 137–138
Test call 111
Making 111
Receiving 111
Thermal breaker rating 75
Wireless speaker 78–79

Time
Format 94
Offset 94
Tools required 52
Training courses 138
Transmit power 93
Troubleshooting 125
Diagnostics 134
GNSS 129
GPS 129
Handset 131
Power 126
VHF radio AIS functions 131
VHF radio alarm audio 128
VHF radio audio 127
VHF radio DSC functions 130
Wireless handset / hub 132
Trunnion mounting 52

U

Urgency call 102
Making 106
Receiving 107

V

VHF antenna 21
VHF channel
Private (Europe) 165
VHF channels
Canada 170
International 161
United States 166
Weather (North America) 170

W

Warranty 15, 137
Watch mode 114
Dual watch 114
Setting 114
Triple watch 114
Water ingress 41
Waterproofing 41
WEEE Directive 15
Wireless
Channel 46
Channel changing 97
Password changing 97
Wireless charging 96
Wireless components 22
Wireless handset stations 96
Wireless hub 97
Antenna extension 60
Name change 98
Pairing 96
Password 97, 99
SSID change 98
Wireless hub settings 99
Wireless menu 99
Wireless set-up 99
Wireless speaker
Disconnecting 99
Pairing 98
WirelessPre-installation
Analyzer 46
Site survey 46